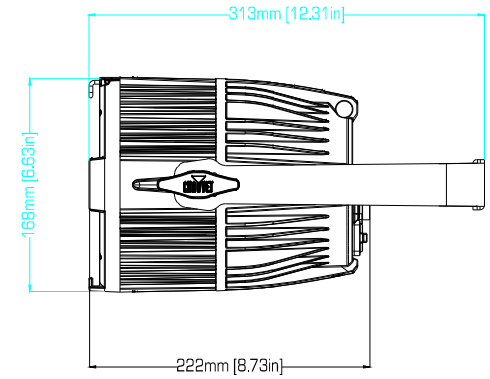

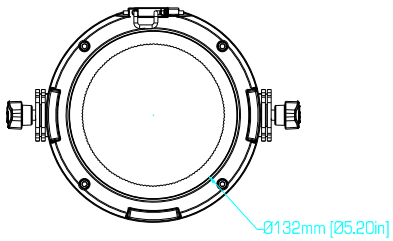

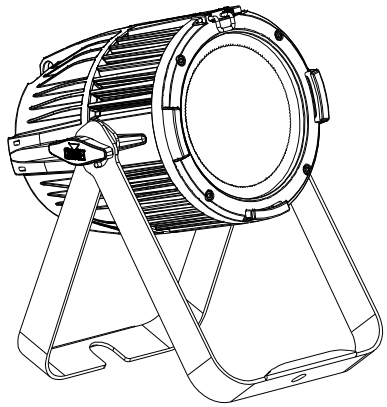

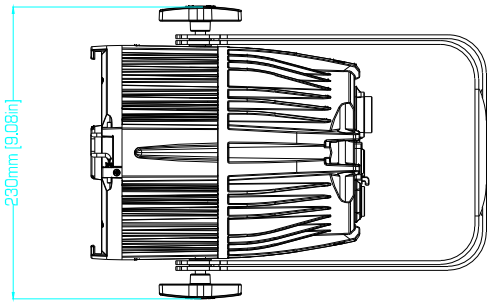

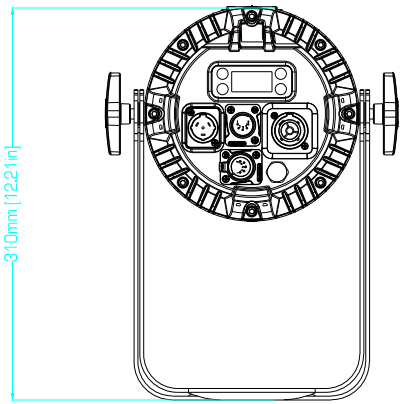

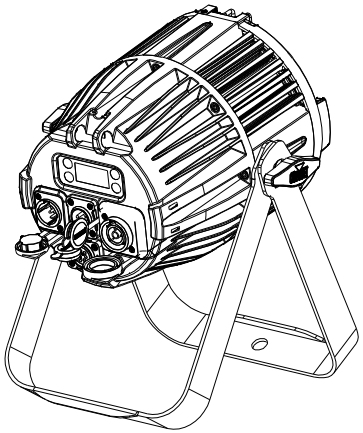

Chauvet Professional	Rev. 2.0
COLORdash S-Par 1	