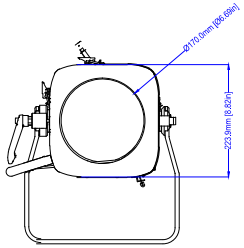

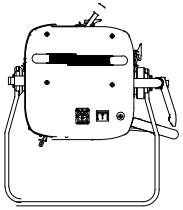

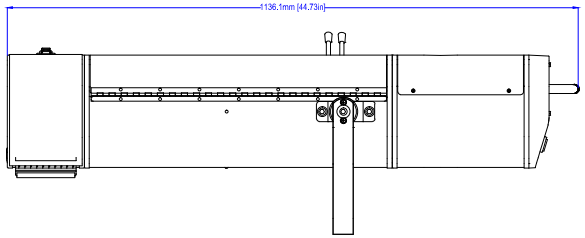

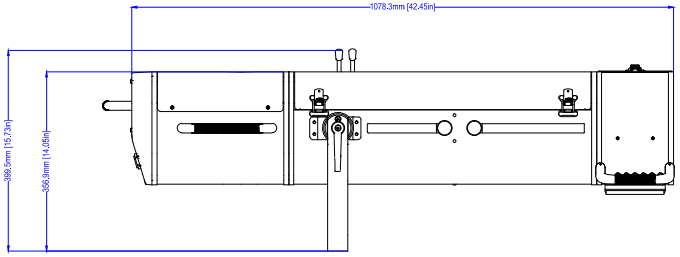

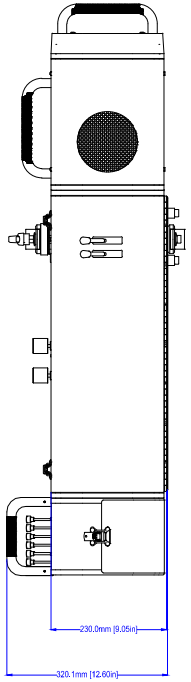

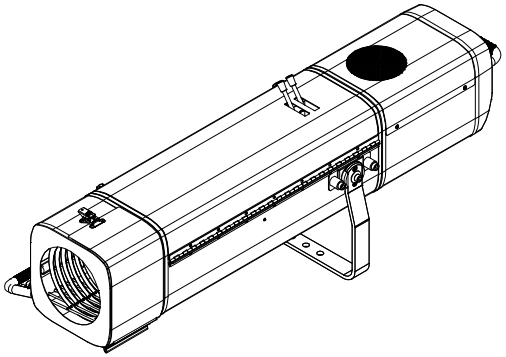

Chauvet Professional	v1.0
Ovation SP-300CW	