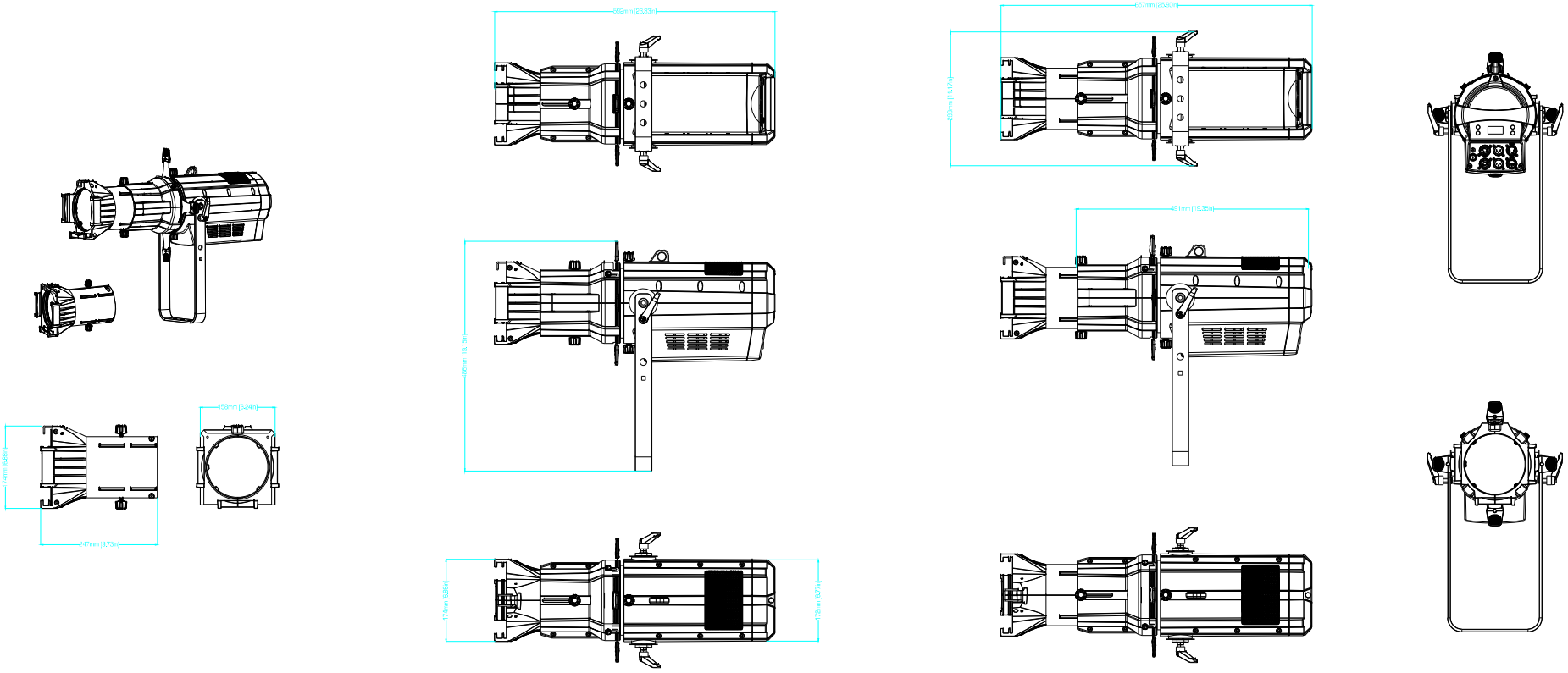

Chauvet Professional	Rev. 2.0
Ovation E-910FC	