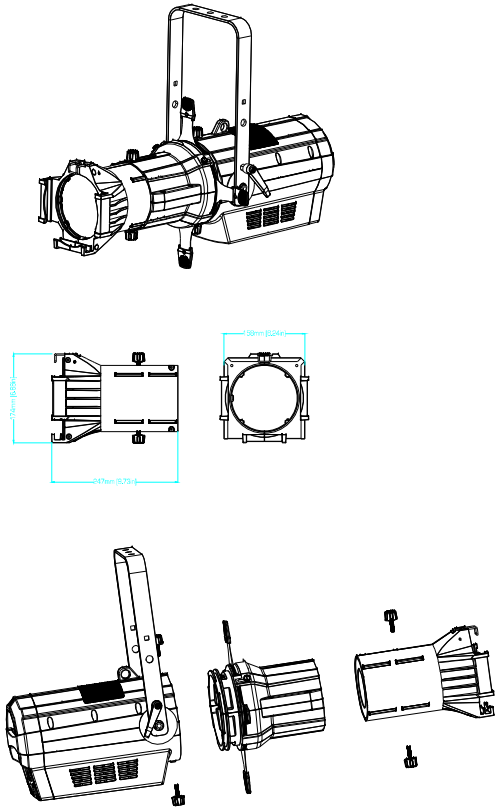

Chauvet Professional	Rev.2.0
Ovation E-260WW	