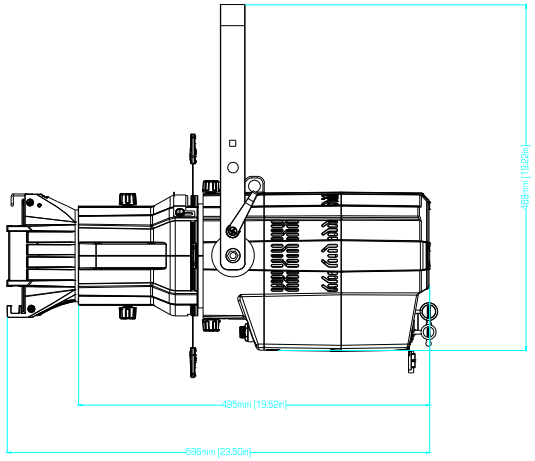

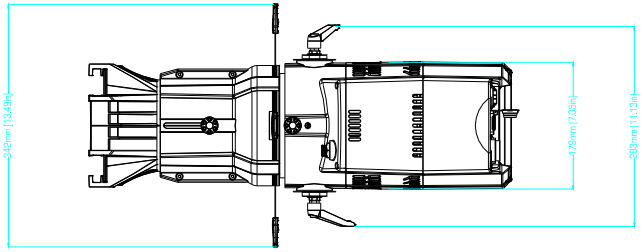

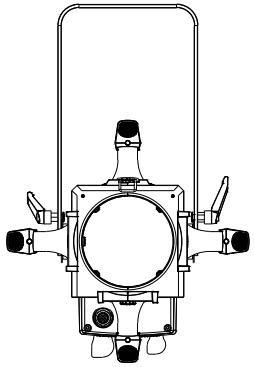

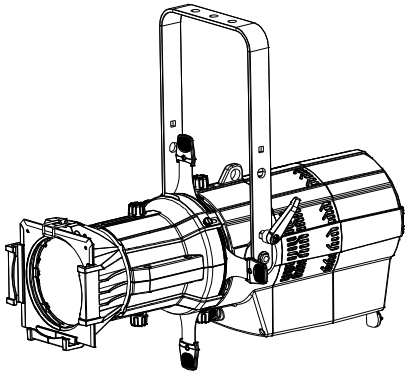

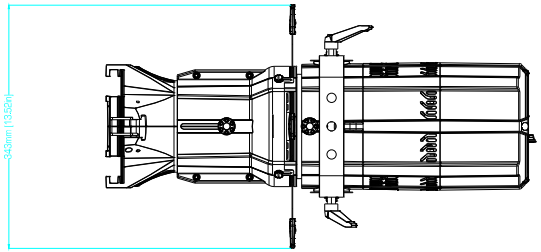

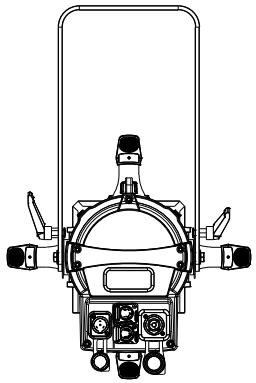

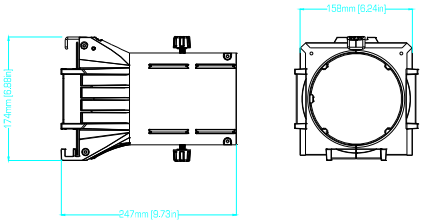

Chauvet Professional	Rev. 2.0
Ovation E-260WW IP	