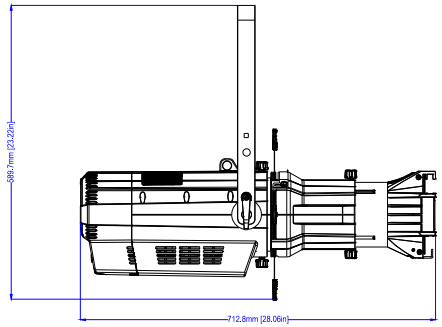

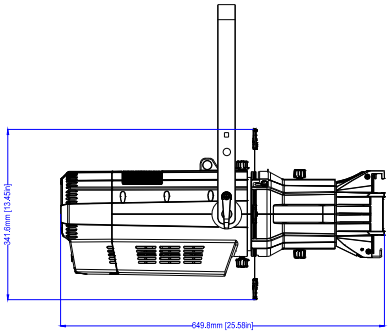

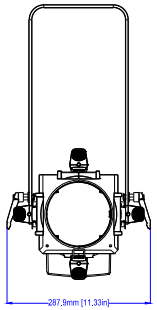

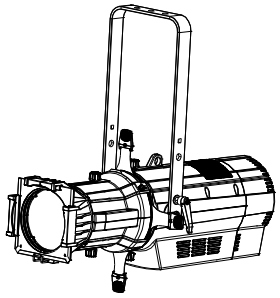

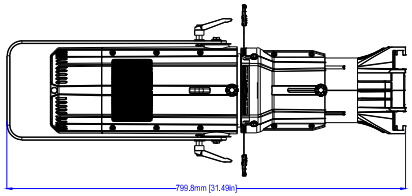

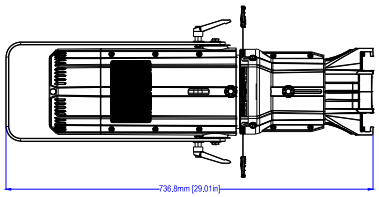

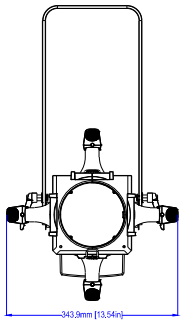

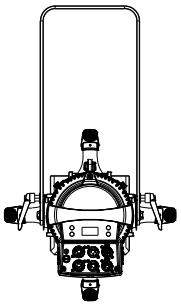

Chauvet Professional	v1.0
Ovation E-930VW	