MAVERICK FORCE

2 BEAMWASH

User Manual

Model ID: MAVERICKFORCE2BEAMWASH

CHAUVET PROFESSIONAL

Edition Notes

The Maverick Force 2 BeamWash User Manual includes a description, safety precautions, installation, programming, operation and maintenance instructions for the Maverick Force 2 BeamWash as of the release date of this edition.

Trademarks

Chauvet, Chauvet Professional, the Chauvet logo, Maverick, and Maverick Force are registered trademarks or trademarks of Chauvet & Sons, LLC (d/b/a Chauvet and Chauvet Lighting) in the United States and other countries. Other company and product names and logos referred to herein may be trademarks of their respective companies.

Copyright Notice

The works of authorship contained in this manual, including, but not limited to, all designs, text, and images are owned by Chauvet.

Electronically published by Chauvet in the United States of America.

Manual Use

Chauvet authorizes its customers to download and print this manual for professional information purposes only. Chauvet expressly prohibits the usage, copy, storage, distribution, modification, or printing of this manual or its content for any other purpose without written consent from Chauvet.

Document Printing

For best results, print this document in color, on letter size paper (8.5 x 11 in), double-sided. If using A4 paper (210 x 297 mm), configure the printer to scale the content accordingly.

Intended Audience

Any person installing, operating, and/or maintaining this product should completely read through the guide that shipped with the product, as well as this manual, before installing, operating, or maintaining this product.

Disclaimer

Chauvet believes that the information contained in this manual is accurate in all respects. However, Chauvet assumes no responsibility and specifically disclaims any and all liability to any party for any loss, damage or disruption caused by any errors or omissions in this document, whether such errors or omissions result from negligence, accident or any other cause. Chauvet reserves the right to revise the content of this document without any obligation to notify any person or company of such revision, however, Chauvet has no obligation to make, and does not commit to make, any such revisions. Download the latest version from www.chauvetprofessional.com.

Document Revision

This is revision 4 of the Maverick Force 2 BeamWash User Manual. Go to www.chauvetprofessional.com for the latest version.

Revision	Date	Description
4	9/2023	USB Software Update verbiage changed. Method 1 applied/ added revision log

TABLE OF CONTENTS

1. Before You Begin

What Is Included

- Maverick Force 2 BeamWash
- Seetronic Powerkon IP65 power cable
- 2 Omega brackets with mounting hardware
- Quick Reference Guide

Claims

Carefully unpack the product immediately and check the container to make sure all the parts are in the package and are in good condition.

If the box or the contents (the product and included accessories) appear damaged from shipping, or show signs of mishandling, notify the carrier immediately, not Chauvet. Failure to report damage to the carrier immediately may invalidate a claim. In addition, keep the box and contents for inspection.

For other issues, such as missing components or parts, damage not related to shipping, or concealed damage, file a claim with Chauvet within 7 days of delivery.

Text Conventions

Convention	Meaning
1–512	A range of values
50/60	A set of values of which only one can be chosen
Settings	A menu option not to be modified
<ENTER>	A key to be pressed on the product's control panel

Symbols

Symbol	Meaning
	Critical installation, configuration, or operation information. Not following these instructions may make the product not work, cause damage to the product, or cause harm to the operator.
	Important installation or configuration information. The product may not function correctly if this information is not used.
	Useful information.

The term "DMX" used throughout this manual refers to the USITT DMX512-A digital data transmission protocol.

Safety Notes

Read all the following safety notes before working with this product. These notes contain important information about the installation, usage, and maintenance of this product.

This product contains no user-serviceable parts. Any reference to servicing in this User Manual will only apply to properly trained, certified technicians. Do not open the housing or attempt any repairs.

All applicable local codes and regulations apply to proper installation of this product.

- The luminaire is intended for professional use only.
- The luminaire should be positioned so that prolonged staring into the luminaire at a distance closer than 16.4 ft (5 m) is not expected.
- If the external flexible cable or cord of this luminaire is damaged, it shall be replaced by a special cord or cord exclusively available from the manufacturer or its service agent.
- The light source contained in this luminaire shall only be replaced by the manufacturer or its service agent or a similar qualified person.
- **CAUTION:**
  - This product's housing may be hot when operating. Mount this product in a location with adequate ventilation, at least 20 in (50 cm) from adjacent surfaces.
  - When transferring the product from extreme temperature environments, (e.g., cold truck to warm humid ballroom) condensation may form on the internal electronics of the product. To avoid causing a failure, allow the product to fully acclimate to the surrounding environment before connecting it to power.
  - Flashing light is known to trigger epileptic seizures. User must comply with local laws regarding notification of strobe use.
- **ALWAYS:**
  - Disconnect from power before cleaning the product or replacing the fuse.
  - Replace the fuse with the same type and rating.
  - Use a safety cable when mounting this product overhead.
  - Connect this product to a grounded and protected circuit.
- **DO NOT:**
  - Open this product. It contains no user-serviceable parts.
  - Look at the light source when the product is on.
  - Leave any flammable material within 100 cm of this product while operating or connected to power.
  - Connect this product to a dimmer or rheostat.
  - Operate this product if the housing, lenses, or cables appear damaged.
  - Operate this product outdoors or in any location where dust, excessive heat, water, or humidity may affect it (adhere to standards for the published IP rating).
- ONLY use the carry handles or hanging/mounting bracket to carry this product.
- The maximum ambient temperature is 113 °F (45 °C). Do not operate this product at higher temperatures.
- The minimum startup temperature is -4°F (-20°C). Do not start the product at lower temperatures.
- To eliminate unnecessary wear and improve its lifespan, during periods of non-use completely disconnect the product from power via breaker or by unplugging it.
- In the event of a serious operating problem, stop using immediately.

If a Chauvet product requires service, contact Chauvet Technical Support.

FCC Statement of Compliance

This device complies with Part 15 Part B of the FCC rules. Operation is subject to the following two conditions:

1. This device may not cause harmful interference, and
2. This device must accept any interference received, including interference that may cause undesired operation.

This equipment has been tested and found to comply with the limits for a Class B digital device, pursuant to Part 15 of the FCC Rules. These limits are designed to provide reasonable protection against harmful interference in a residential installation. This equipment generates uses and can radiate radio frequency energy and, if not installed and used in accordance with the instructions, may cause harmful interference to radio communications. However, there is no guarantee that interference will not occur in a particular installation. If this equipment does cause harmful interference to radio or television reception, which can be determined by turning the equipment off and on, the user is encouraged to try to correct the interference by one or more of the following measures:

- Reorient or relocate the receiving antenna.
- Increase the separation between the equipment and receiver.
- Connect the equipment into an outlet on a circuit different from that to which the receiver is connected.
- Consult the dealer or an experienced radio/TV technician for help.

Any changes or modifications not expressly approved by the party responsible for compliance could void the user's authority to operate the equipment.

RF Exposure Warning for North America and Australia

Warning! This equipment complies with FCC radiation exposure limits set forth for an uncontrolled environment. This equipment should be installed and operated with a minimum distance of 20 cm between the radiator and the user. This transmitter must not be co-located or operating in conjunction with any other antenna or transmitter.

Expected LED Lifespan

Over time, use and heat will gradually reduce LED brightness. Clustered LEDs produce more heat than single LEDs, contributing to shorter lifespans if always used at full intensity. The average LED lifespan is 40,000 to 50,000 hours. To extend LED lifespan, maintain proper ventilation around the product, and limit the overall intensity.

2. Introduction

Description

A lighter, brighter, tighter, faster RGBW LED yoke wash fixture with pixel mapping and zoom, the Maverick Force 2 BeamWash incorporates the latest LED and optical technologies to project the narrowest beams and deliver the deepest aerial washes. Foreground and background colors combine for sizzling atmospheric effects instantrly with its built-in virtual gobo wheel. flawlessly even output, full pixel mappiing, and smooth 16-bit fades make this fixture a force to be reckoned with, live or on camera. Take control with DMX, RDM, sACN, Art-Net, Kling-Net, or W-DMX.

Features

- Fully featured RBGBW LED yoke wash fixture
- Pixel mapping and zoom
- Virtual color wheel with various options
- Built in virtual gobo wheel
- DMX, WDMX, sACN, Art-Net, and Kling-Net
- RDM enabled for remote addressing and trouble shooting
- 3.7 to 50.2 zoom range for variable beam sizes.
- Variable calibrated white with maximum 7500K at full output
- True 1 compatible power input
- USB-C software update port
- Battery backup display with auto rotate
- Three setup menu presets and preset sync

Product Overview

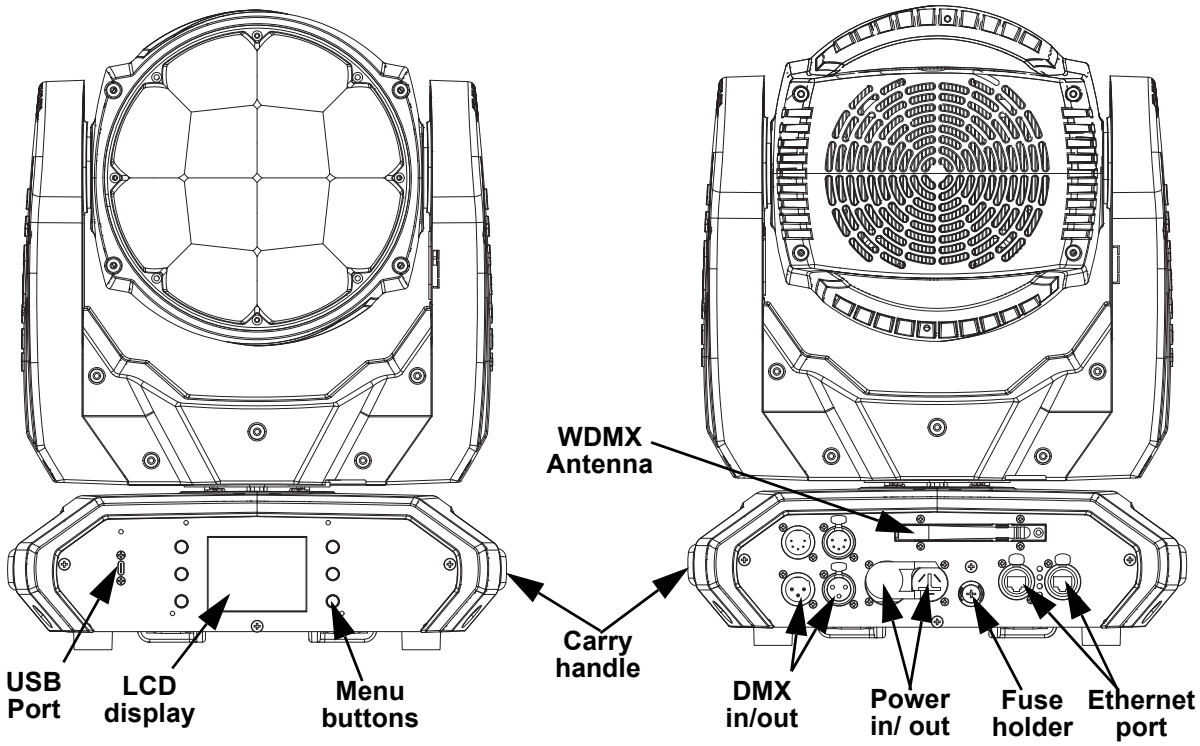

Product Dimensions

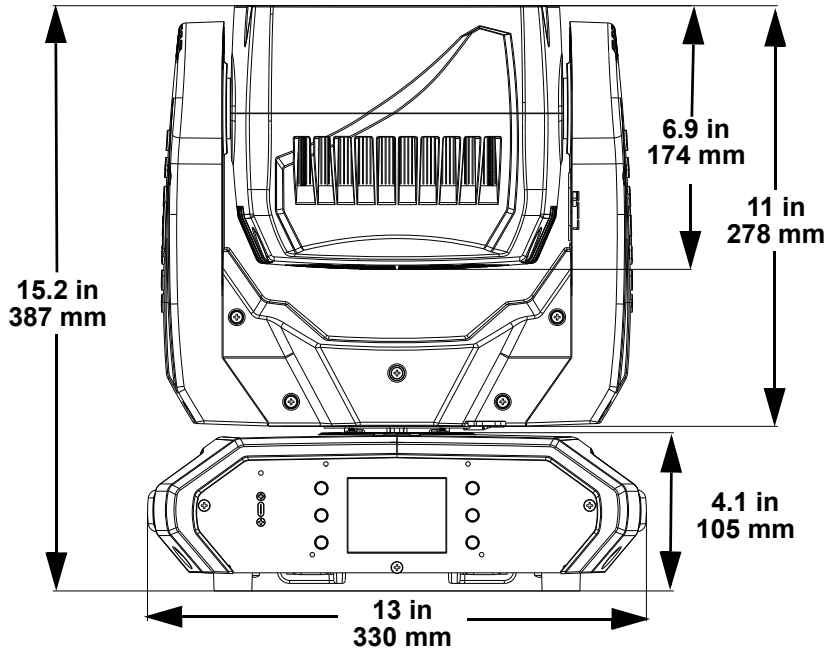

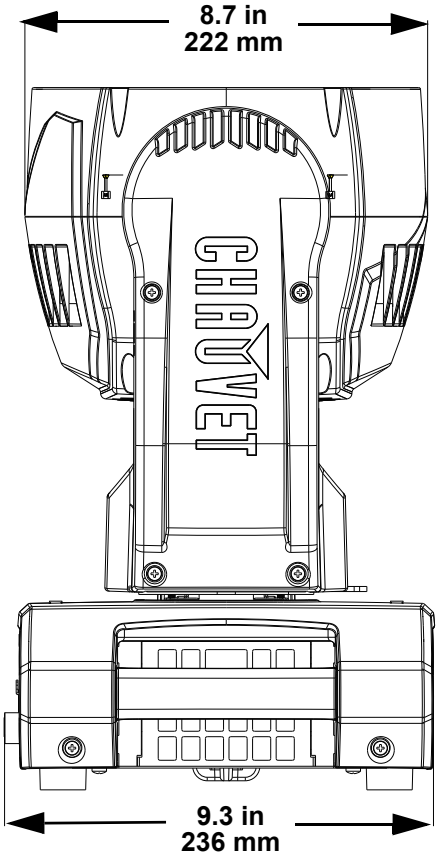

3. Setup

AC Power

The Maverick Force 2 BeamWash has an auto-ranging power supply and it can work with an input voltage range of 100 to 240 VAC, 50/60 Hz.

To determine the product's power requirements (circuit breaker, power outlet, and wiring), use the current value listed on the label affixed to the product's back panel, or refer to the product's specifications chart. The listed current rating indicates the product's average current draw under normal conditions.

- **Always connect the product to a protected circuit (a circuit breaker or fuse). Make sure the product has an appropriate electrical ground to avoid the risk of electrocution or fire.**
- **To eliminate unnecessary wear and improve its lifespan, during periods of non-use completely disconnect the product from power via breaker or by unplugging it.**

Never connect the product to a rheostat (variable resistor) or dimmer circuit, even if the rheostat or dimmer channel serves only as a 0 to 100% switch.

AC Plug

The Maverick Force 2 BeamWash comes with a power input cable terminated with a Seetronic Powerkon A connector on one end and an Edison plug on the other end (U.S. market). Use the table below to wire a plug.

Connection	Wire (U.S.)	Wire (Europe)	Screw Color
AC Live	Black	Brown	Yellow or Brass
AC Neutral	White	Blue	Silver
AC Ground	Green/Yellow	Green/Yellow	Green

Power Linking

It is possible to power link Maverick Force 2 BeamWash products. See the table below for the current draw at each voltage and frequency:

	100 V, 60 Hz	120 V, 60 Hz	208 V, 60 Hz	230 V, 50 Hz	240 V, 60 Hz
Current Draw	6.35 A	5.23 A	2.96 A	2.68 A	2.55 A

Never exceed 12A on a single circuit. Power-linking cables can be purchased separately.

Fuse Replacement

1. Disconnect this product from the power outlet.
2. Using a flat-head screwdriver, unscrew the fuse holder cap from the housing.
3. Remove the blown fuse and replace with another fuse of the same type and rating (F 10 A, 250 V).
4. Screw the fuse holder cap back in place and reconnect power.

Remote Device Management

Remote Device Management, or RDM, is a standard for allowing DMX-enabled devices to communicate bi-directionally along existing DMX cabling. Check the DMX controller's User Manual or with the manufacturer as not all DMX controllers have this capability. The Maverick Force 2 BeamWash supports RDM protocol that allows feedback to make changes to menu map options.

USB Software Update

The Maverick Force 2 BeamWash allows for software updates with a USB device using the built-in USB port. To update the software using a USB flash drive, do the following:

1. Power on the product, and plug the flash drive into the USB port.
2. Once the flash drive has been detected, the message "**USB UPDATE**" will be displayed. Select **YES**.
3. The next screen will show the software versions available for this fixture on the USB drive. For multiple versions of the software for the same fixture, use <**UP**> or <**DOWN**> to select the desired version. Press <**ENTER**>.
4. The "**USB UPDATE**" screen will re-appear. Select **YES**.

It is possible to update multiple units with the USB if they are daisy chained via DMX.

5. The update will start. **DO NOT** turn off the power or disconnect the USB while the USB LED is still blinking during the process. The screen display will read: "**USB Update Wait**". The update can take several minutes to complete.
   - When the USB firmware is done uploading, in some fixtures, the display will change to: "**DO NOT UNPLUG, UPDATING**".
6. When the update is completed, the fixture will automatically reboot.
7. Go to Fixture Information on the product's menu map and confirm the firmware revision.
8. When the boot-up process is finished, restart the product.

- **Place the .chl file in the root directory of the USB drive.**
- **The product's USB port supports up to 32GB capacity and only works with FAT32 file format.**

Turning off the power or removing the USB while the USB LED is still blinking during the update will cause partial or total firmware failure in the targeted fixture(s). If this occurs, the user will need the UPLOAD 08 device to fix this. Please contact Chauvet regarding this device.

Mounting

Before mounting the product, read and follow the safety recommendations indicated in the Safety Notes. For the Chauvet Professional line of mounting clamps, go to http://trusst.com/products/.

Orientation

Always mount this product in a safe position, making sure there is adequate room for ventilation, configuration, and maintenance.

Rigging

Chauvet recommends using the following general guidelines when mounting this product.

- Before deciding on a location for the product, make sure there is easy access to the product for maintenance and programming purposes.
- Make sure that the structure and attachment points can support the weight before hanging the product (see the Technical Specifications for weight information).
- When mounting the product overhead, always use a safety cable. Mount the product securely to a rigging point, whether an elevated platform or a truss.
- When rigging the product onto a truss, use a mounting clamp of appropriate weight capacity.

Procedure

The Maverick Force 2 BeamWash comes with 2 Omega brackets to which the user can directly attach mounting clamps (sold separately). Make sure the clamps are capable of supporting the weight of this product. Use at least two mounting points per product. For the Chauvet Professional line of mounting clamps, go to http://www.trusst.com/products.

Mounting Diagram

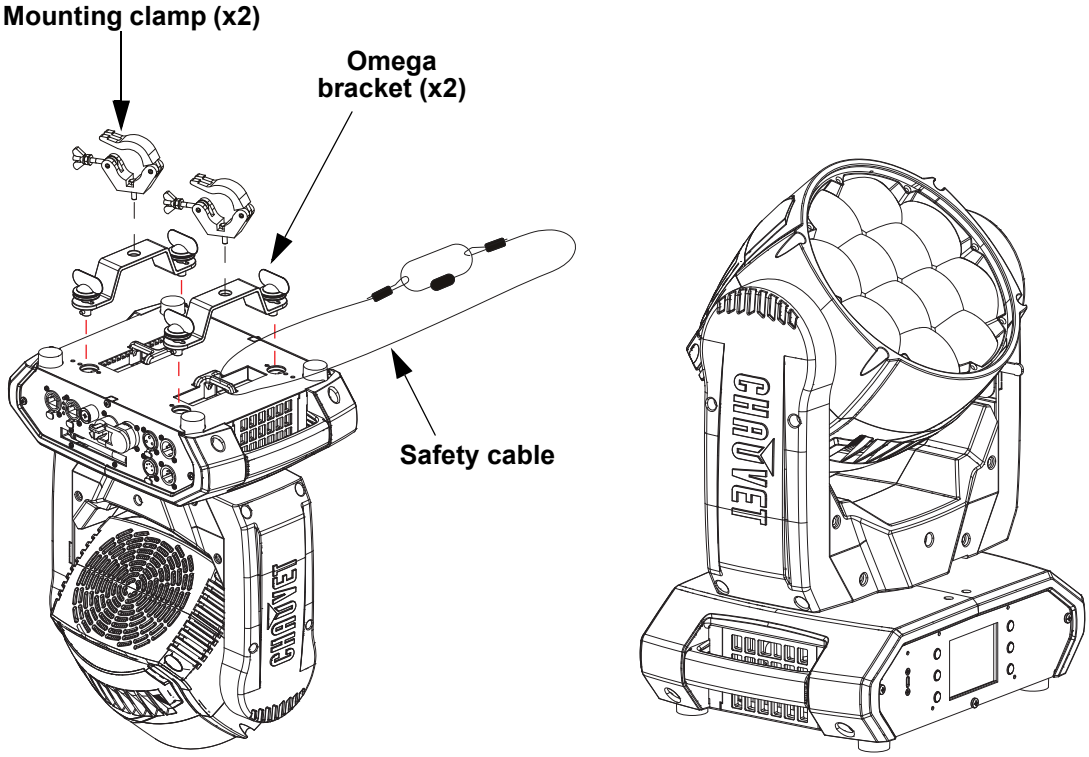

Overhead mounting **Surface mounting**

Signal Connections

The Maverick Force 2 BeamWash can receive a DMX, Art-Net™, or sACN, signal. The Maverick Force 2 BeamWash has two Amphenol XLRnet through ports, 3-pin and 5-pin DMX in and out ports. If using other compatible products with this product, it is possible to control each individually with a single controller.

Control Personalities

The Maverick Force 2 BeamWash uses a 3-pin and 5-pin DMX data connection, WDMX, Art-Net™, Kling-Net, or sACN for its control personalities:

Single Control	Dual Control Movement	Dual Control Pixels
Basic (20-channel)	**Basic** (8-channel)	**Basic** (36-channel)
Standard (68-channel)	**Standard** (20-channel)	**Standard** (48-channel)
Advanced (122-channel)	**Advanced** (26-channel)	**Advanced** (96-channel)
Tour (146-channel)		
Basic2 (25-channel)		

- Refer to the Operation chapter to learn how to configure the Maverick Force 2 BeamWash to work in these personalities.
- The Control Channel Assignments and Values section provides detailed information regarding the control personalities.

For more information about DMX standards or the DMX cables needed to link this product to a DMX controller, download the DMX Primer from the Chauvet website: www.chauvetprofessional.com.

DMX Linking

The Maverick Force 2 BeamWash can link to a DMX controller using a 3-pin and 5-pin DMX connection or a WDMX connection. For more information about DMX, read the DMX primer at: https://www.chauvetprofessional.com/wp-content/uploads/2016/06/DMX_Primer.pdf.

Art-Net™ Connection

Art-Net™ is an Ethernet protocol that uses TCP/IP that transfers a large amount of DMX512 data using an Amphenol XLRnet RJ45 connection over a large network. An Art-Net™ protocol document is available from www.chauvetprofessional.com.

Art-Net™ designed by and copyright Artistic Licence Holdings Ltd.

sACN Connection

Streaming ACN (Architecture for Control Networks), also known as ANSI E1.31, is an Ethernet protocol that uses the layering and formatting of ACN to transport DMX512 data over IP or any other ACN-compatible network.

Connection Diagram

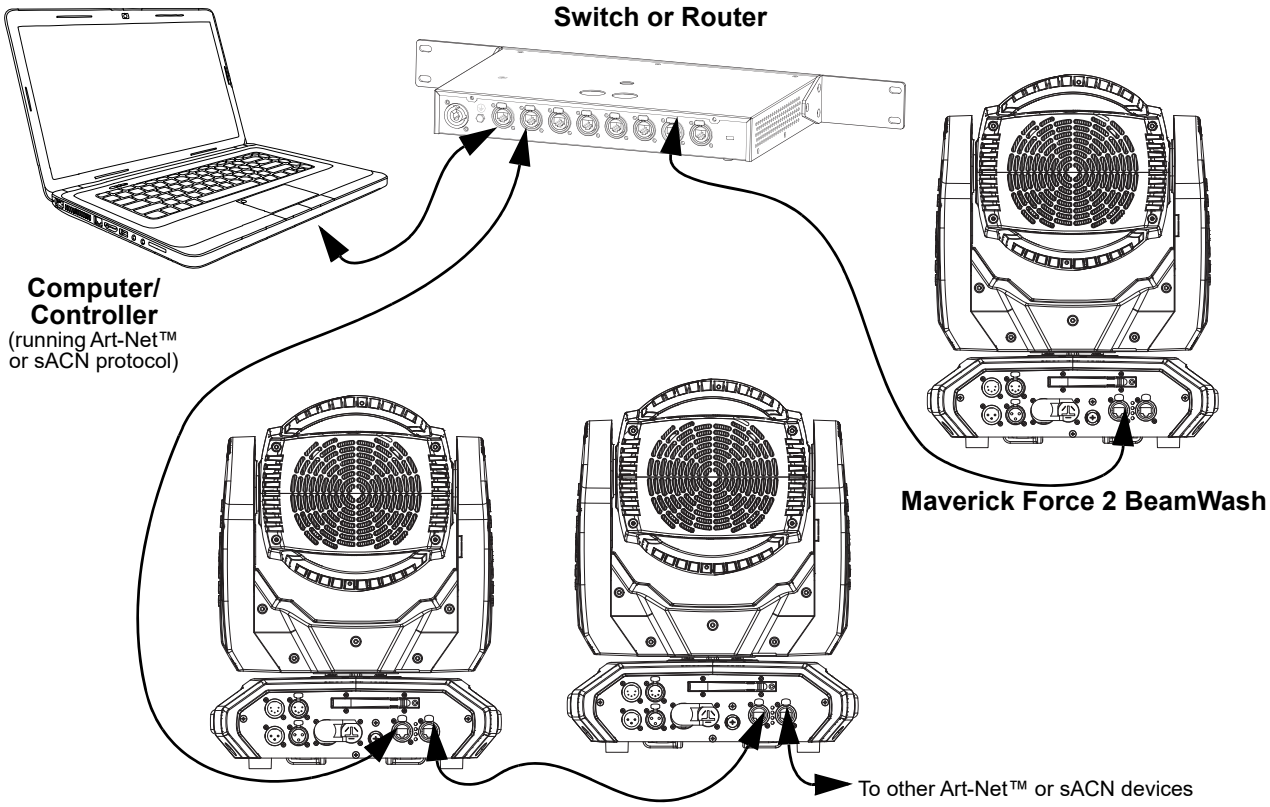

4. Operation

Control Panel Description

Button	Name	Function
⇧	**<UP>**	Navigates upwards through the menu list or increases the value when in a function
☰	**<MENU>**	Exits from the current menu or function
⇩	**<DOWN>**	Navigates downwards through the menu list or decreases the value when in a function
⇦	**<LEFT>**	Navigates leftwards through the menu list
⏎	**<ENTER>**	Enables the currently displayed menu or sets the selected value into the function
⇨	**<RIGHT>**	Navigates rightwards through the menu list

Battery Powered Display

The Maverick Force 2 BeamWash has a battery powered display which enables access to the menu when the product is powered off. Press and hold **<MENU>** until the display activates (approximately 15 seconds).

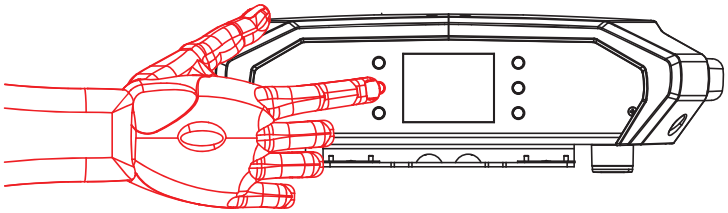

Home Screen

The Maverick Force 2 BeamWash has a home screen that shows the current control protocols, personalities, starting addresses, IP addresses, and universes. To see the home screen, press **<MENU>** repeatedly until it shows on the display. From the home screen, touch any of the displayed control settings to immediately jump to that part of the menu, such as the personality, starting address, or universe, or press **<ENTER>** to reach the main menu.

Control Panel Lock

The setting locks or unlocks the control panel.

1. Go to the **Settings** main level.
2. Select the **Lock Screen** option.
3. Select **NO** (control panel stays unlocked) or **YES** (locks control panel).

When the control panel lock is activated, the product will prompt for the passcode in order to access the menu. Enter the passcode as described below.

Passcode

After being prompted to enter the passcode, enter the numbers **0920**.

Technician Mode

The technician mode disables the pan/tilt motors, allowing the output of the product to be aimed by hand. To enable the technician mode of the Maverick Force 2 BeamWash, hold **<UP>** and **<LEFT>** while the product is powering on. When the product is turned off and back on, the pan and tilt will return to normal function.

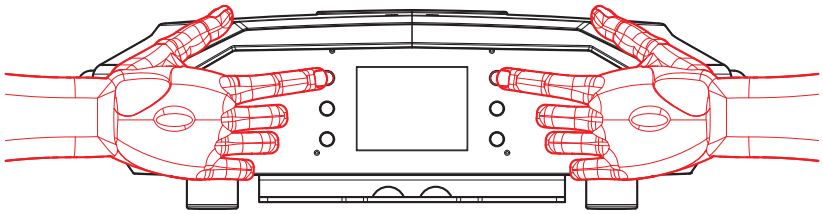

Menu Map

Refer to the Maverick Force 2 BeamWash product page on www.chauvetprofessional.com for the latest menu map.

Programming Levels					Description
Control Settings					**Control Settings Main Level**
Control Settings	**Single Control**	**DMX**	**Personality**	**Basic**	Sets the DMX personality: (see Control Personalities)
				Standard	
				Advanced	
				Tour	
				Basic 2	
			Start Address	**001–512**	Sets the DMX starting address
		ArtNet	**Personality**	**Basic**	Sets the Art-Net™ personality: (see Control Personalities)
				Standard	
				Advanced	
				Tour	
				Basic 2	
			Start Address	**001–512**	Sets the Art-Net™ starting address
			Universe	**000–255**	Sets the Art-Net™ universe
		sACN	**Personality**	**Basic**	Sets the sACN personality: (see Control Personalities)
				Standard	
				Advanced	
				Tour	
				Basic 2	
			Start Address	**001–512**	Sets the sACN starting address
			Universe	**000–256**	Sets the sACN universe
		WDMX	**Personality**	**Basic**	Sets the WDMX personality: (see Control Personalities)
				Standard	
				Advanced	
				Tour	
				Basic 2	
			Start Address	**001–512**	Sets the WDMX starting address

Programming Levels						Description
Control Settings (cont.)						**Control Settings Main Level**
Control Settings	**Dual Control**	**Movement**	**DMX**	**Personality**	**Basic**	Sets the DMX personality: (see Control Personalities)
					Standard	
					Advanced	
				Start Address	**1–512**	Sets the DMX starting address
			ArtNet	**Personality**	**Basic**	Sets the Art-Net™ personality: (see Control Personalities)
					Standard	
					Advanced	
				Start Address	**1–512**	Sets the Art-Net™ starting address
				Universe	**0–255**	Sets the Art-Net™ universe
			sACN	**Personality**	**Basic**	Sets the sACN personality: (see Control Personalities)
					Standard	
					Advanced	
				Start Address	**1–512**	Sets the sACN starting address
				Universe	**0–256**	Sets the sACN universe
		Pixels	**DMX**	**Personality**	**Basic**	Sets the DMX personality (see Control Personalities)
					Standard	
					Advanced	
				Start Address	**001–512**	Sets the DMX starting address
			ArtNet	**Personality**	**Basic**	Sets the Art-Net™ personality: (see Control Personalities)
					Standard	
					Advanced	
				Start Address	**001–512**	Sets the Art-Net™ starting address
				Universe	**000–255**	Sets the Art-Net™ universe
			sACN	**Personality**	**Basic**	Sets the sACN personality: (see Control Personalities)
					Standard	
					Advanced	
				Start Address	**1–512**	Sets the sACN starting address
				Universe	**0–255**	Sets the sACN universe
			Kling-Net	**Personality**	**Basic**	Sets the Kling-Net personality: (see Control Personalities)
					Standard	

Main Level	Programming Levels			Description
Test Mode	**Auto Test**			Auto test all functions
	Manual Test	**Pan**	**000–255**	Manually control and test all settings through the control panel
		Tilt		
		Red		
		Green		
		Blue		
		White		
		CTC		
		Color		
		Pattern		
		LED Macro		
		LED Ma. Speed		
		LED Ma. Fade		

Main Level	Programming Levels			Description
Test Mode (cont.)	**Manual Test** (cont.)	**Background**	**000–255**	Manually control and test all settings through the control panel
		Background Dim.		
		Dimmer		
		Shutter		
		Function		
		Zoom		
Setup	**Network Settings**	**IP Mode**	**Manual**	Manually set IP address
			DHCP	Network sets IP address
			Static	Product sets IP address
		Ip	___.___.___.___	Sets IP address in Manual mode
		SubMask	___.___.___.___	Sets Subnet Mask in Manual mode
	Pan Reverse	**NO**		Normal pan
		YES		Reversed pan
	Tilt Reverse	**NO**		Normal tilt
		YES		Reversed tilt
	Zoom Reverse	**NO**		Normal Zoom
		YES		Reversed Zoom
	Screen Reverse	**NO**		Normal display
		YES		Inverted display
		AUTO		Automatic display orientation
	Pan Angle	**540**		540° pan range
		360		360° pan range
		180		180° pan range
	Tilt Angle	**270**		270° tilt range
		180		180° tilt range
		90		90° tilt range
	BL. O. P/T Move	**NO**		Do not black out while pan/tilt
		YES		Blackout while pan/tilt
	Calibration	**NO**		Keep current settings
		YES		Calibrate touchscreen
	Touchscreen Lock	**NO**		Display responds to touch
		YES		Display does not respond to touch
	Lock Screen	**NO**		Lock the buttons and touch screen Passcode: 0920
		YES		
	Swap XY	**NO**		Do not swap pan and tilt
		YES		Pan controls tilt, tilt controls pan
	WDMX Reset	**NO**		Do not reset WDMX
		YES		Reset WDMX
	Backlight Timer	**30S**		Display turns off after 30 seconds
		1M		Display turns off after 1 minute
		5M		Display turns off after 5 minutes
		ON		Display stays on
	Loss of Data	**Hold**		Holds last signal received
		Close		Blacks out fixture

Main Level	Programming Levels			Description
Setup (cont.)	**Fans**	**Auto**		Fan speed according to product temperature
		Full		Fan speed set on high
		ECO		Quiet mode
		TV25		Maintains LED output up to an ambient temperature of 77 °F (25 °C) (**TV25**) or 95 °F (35 °C) (**TV35**).
		TV35		When using these fan modes, please set the **PWM Options** to **6000Hz** or **15000Hz** to prevent any harmonization noise.
	C Mixing Mode	**RGBW**		RGBW mode
		CMY		CMY mode (R=C, G=M, B=Y)
	Dimmer Curve	**Linear**		Set the dimmer curve
		Square		
		I Squa		
		SCurve		
	Dimmer Speed	**Smooth**		Set the dimmer speed
		Fast		
	PWM Option	**600Hz**		Define Pulse Width Modulation setting
		1200Hz		
		2000Hz		
		4000Hz		
		6000Hz		
		15000Hz		
	Color Balance	**Red**	**100–255**	Sets red LED maximum value
		Green		Sets green LED maximum value
		Blue		Sets blue LED maximum value
		White		Sets white LED maximum value
	Calibrated White	**ON**		Calibrated white balance
		OFF		Uses maximum white values
		Custom		Uses custom white balance
	White Balance	**Red**	**000–255**	Sets red LED maximum value
		Green		Sets green LED maximum value
		Blue		Sets blue LED maximum value
		White		Sets white LED maximum value
	Preset Select	**PRESET A**		Recorded preset menu options
		PRESET B		
		PRESET C		
	Preset Sync	**NO**		Allows recorded preset menu options to be transferred to other Maverick Force 2 BeamWash products in the DMX daisy chain
		YES		
	USB Update	**NO**		Update firmware via USB C
		YES		

Main Level	Programming Levels			Description
Setup (cont.)	**Reset Function**	**Pan/Tilt**	**NO**	Reset individual functions or all functions from start-up
			YES	
		Zoom	**NO**	
			YES	
		All	**NO**	
			YES	
	Factory Settings	**NO**		Reset to factory default settings
		YES		
Sys Info	**Fixture Information**	**Ver**	**V_**	Shows firmware version
		Running Mode	**_ _ _**	Shows current running mode
		Address	**_ _ _/_ _ _**	Shows current starting address
		Temperature	**– – –**	Shows current product temperature in °C
		Fixture Hours	**– – – – –**	Shows number of hours product has been powered on
		Ip	**_ _ _._ _ _._ _ _._ _ _**	Shows current IP address
		SubMask	**_ _ _._ _ _._ _ _._ _ _**	Shows current Subnet Mask
		MAC	**_ _._ _._ _._ _._ _._ _**	Shows current MAC address
		LED Hours	**– – – – –**	Shows number of hours LEDs have been powered on
	Fan Information	**Head Fan1 Speed**	**– – – –**	Shows speed of head fans in rpm
		Head Fan2 Speed	**– – – –**	
		Base Fan1 Speed	**– – – –**	
		Base Fan2 Speed	**– – – –**	
	Error Information	**No Error!***		Shows any errors, or No Error!
	Channel Information	**Frequency**	**– – –**	Shows all current values from input signals, 000–255
		Pan		
		Pan Fine		
		Tilt		
		Tilt Fine		
		CTC		
		Color		
		Pattern		
		LED Macro		
		LED Ma. Speed		
		LED Ma. Fade		
		Background		
		Background Dim.		
		Big. Dim. Fine		
		Dimmer		
		Dimmer Fine		

Main Level	Programming Levels			Description
Sys Info (cont.)	**Channel Information** (cont.)	**Shutter**	– – –	Shows all current values from input signals, 000–255
		Zoom		
		Function		
		Red		
		Red Fine		
		Green		
		Green Fine		
		Blue		
		Blue Fine		
		White		
		White Fine		
		Dimmer (all, **1–12**)		
		Dimmer Fine (all, **1–12**)		
		Red (all, **1–12**)		
		Red Fine (all, **1–12**)		
		Green (all, **1–12**)		
		Green Fine (all, **1–12**)		
		Blue (all, **1–12**)		
		Blue Fine (all, **1–12**)		
		White (all, **1–12**)		
		White Fine (all, **1–12**)		

Control Configuration

Use control configurations to operate the product with a DMX, Art-Net™, or sACN controller.

Control Mode

The Maverick Force 2 BeamWash works with wired DMX, WDMX, Art-Net™, Kling-Net, and sACN control signals. To select which single control protocol to use:

1. Go to the **Control Settings** main level.
2. Select the **Single Control** option
3. Select the desired protocol, from **DMX**, **ArtNet**, **sACN**, or **WDMX**.

To select which dual control protocol to use:

1. Go to the **Control Settings** main level.
2. Select the **Dual Control** option
1. Select either **Movement** (select from **DMX**, **ArtNet**,, or **sACN**) or **Pixels** (select from **DMX**, **ArtNet**,, or **KlingNet**).

Control Personalities

To set the control personality:

1. Select the **Personality** option.
2. Select the desired personality, from:

Single Control	Dual Control Movement	Dual Control Pixels
Basic (20-channel)	**Basic** (8-channel)	**Basic** (36-channel)
Standard (68-channel)	**Standard** (20-channel)	**Standard** (48-channel)
Advanced (122-channel)	**Advanced** (26-channel)	**Advanced** (96-channel)
Tour (146-channel)		
Basic2 (25-channel)		

- See the Starting Address section for the highest selectable starting address for each personality.
- Make sure that the starting addresses on the various products do not overlap due to the new personality setting.

Starting Address

Each product will respond to a unique starting address from the controller. All products with the same starting address will respond in unison.

To set the starting address in Single Control mode:

1. Go to the **Address Setting** level.
2. Select the starting address (**001**–**512**).
   - The highest recommended starting address for **Basic** mode is **492**.
   - The highest recommended starting address for **Standard** mode is **444**.
   - The highest recommended starting address for **Advanced** mode is **390**.
   - The highest recommended starting address for **Tour** mode is **366**.
   - The highest recommended starting address for **Basic 2** mode is **487**.

To set the starting address in Dual Control mode:

1. Go to the **Movement Address Setting** level or the **Pixels Address Setting** level.
2. Select the starting address (**001**–**512**)
   - The highest recommended starting address for **Basic** mode is **477**.
   - The highest recommended starting address for **Standard** mode is **465**.
   - The highest recommended starting address for **Advanced** mode is **417**.

Network Setup

The Network Setup settings control the IP address, subnet mask, and universe of the product.

IP Mode

To choose how the IP address is set:

1. Go to the **Network Setup** level.
2. Select the **IP Mode** option.
3. Select the desired IP mode, from **Manual** (to set a custom IP address), **DHCP** (the IP address is assigned by the connected network), or **Static** (the product uses a default, preset IP address).

Universe

To assign an Art-Net™ or sACN universe to the Maverick Force 2 BeamWash:

1. Go to the **ArtNet Setting** or **sACN Setting** level.
2. Select the **Universe** option.
3. Set the universe, from **000–255** (for Art-Net™) or from **001–256** (for sACN).

Manual IP Address

To set the IP address when the **IP Mode** is set to **Manual**:

1. Go to the **Network Setup** level.
2. Select the **Ip** option.
3. Set the 4 values of the IP address from **000–255**.

Subnet Mask

To set the subnet mask:

1. Go to the **Network Setup** level.
2. Select the **SubMask** option.
3. Set the 4 values of the subnet mask from **000–255**.

Control Channel Assignments and Value

Pixel Chart

Rear panel

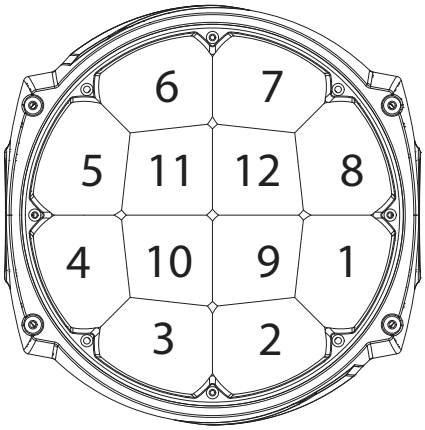

Front panel

Control Channel Assignments and Values

Single Control Values

B: Basic (20 channels), B2: Basic 2 (25 channels), S: Standard (68 channels), A: Advanced (122 channels), T: Tour (146 channels)

B	B2	S	A	T	Function	Value	Percent/Setting				
1	1	1	1	1	**Pan**	000 ⇔ 255	0–100%				
2	2	2	2	2	**Pan fine**	000 ⇔ 255	0–100%				
3	3	3	3	3	**Tilt**	000 ⇔ 255	0–100%				
4	4	4	4	4	**Tilt fine**	000 ⇔ 255	0–100%				
5	5	5	5	5	**CTC**	000	No function				
						001 ⇔ 255	Color temperature, 10000–2800K				
6	6	6	6	6	**Color macro**	000	No function				
						001 ⇔ 255	Color macros				
7	7	7	7	7	**Gobo**	000	No function				
						001 ⇔ 168	Gobos (indexed)				
						169 ⇔ 255	No function				
8	8	8	8	8	**LED macro/ Auto program**	000 ⇔ 015	No function				
						016 ⇔ 085	LED macros				
						086 ⇔ 135	Cycles all macros				
						136 ⇔ 205	Auto programs				
						206 ⇔ 255	Cycles all automatic programs				
9	9	9	9	9	**LED macro/ Auto program speed**	000 ⇔ 127	Auto speed, fast to slow				
						128	Hold				
						129 ⇔ 255	Auto speed, slow to fast				
10	10	10	10	10	**LED macro delay**	000 ⇔ 255	Fast to slow				
11	11	11	11	11	**Background color**	000	No function				
						001 ⇔ 002	2700K	R: 156	G: 118	B: 0	W: 63
						003 ⇔ 004	3200K	R: 156	G: 141	B: 5	W: 89
						005 ⇔ 006	4200K	R: 156	G: 141	B: 14	W: 255
						007 ⇔ 008	5600K	R: 156	G: 207	B: 54	W: 255
						009 ⇔ 010	8000K	R: 130	G: 255	B: 96	W: 255
						011	Blue	R: 0	G: 0	B: 255	W: 0
						012 ⇔ 048	+ Green	R: 0	G: 0–255	B: 255	W: 0
						049	Cyan	R: 0	G: 255	B: 255	W: 0
						050 ⇔ 086	- Blue	R: 0	G: 255	B: 255–0	W: 0
						087	Green	R: 0	G: 255	B: 0	W: 0
						088 ⇔ 124	+ Red	R: 0–255	G: 255	B: 0	W: 0
						125	Yellow	R: 255	G: 255	B: 0	W: 0
						126 ⇔ 162	- Green	R: 255	G: 255–0	B: 0	W: 0
						163	Red	R: 255	G: 0	B: 0	W: 0
						164 ⇔ 200	+ Blue	R: 255	G: 0	B: 0–255	W: 0
						201	Magenta	R: 255	G: 0	B: 255	W: 0
						202 ⇔ 238	- Red	R: 255–0	G: 0	B: 255	W: 0
						239	Blue	R: 0	G: 0	B: 255	W: 0
						240 ⇔ 247	Color fade, fast to slow				
						248 ⇔ 255	Color snap, fast to slow				
12	12	12	12	12	**Background dimmer**	000 ⇔ 255	0–100%				

B	B2	S	A	T	Function	Value	Percent/Setting
–		–	13	13	**Background fine dimmer**	000 ⇔ 255	0–100%
13	13	13	14	14	**Main dimmer**	000 ⇔ 255	0–100%
–	14	–	15	15	**Main fine dimmer**	000 ⇔ 255	0–100%
14	15	14	16	16	**Shutter**	000 ⇔ 019	Off
						020 ⇔ 024	On
						025 ⇔ 064	Strobe, fast to slow
						065 ⇔ 069	On
						070 ⇔ 084	Strobe 100–0%, fast to slow
						085 ⇔ 089	On
						090 ⇔ 104	Strobe 0–100%, fast to slow
						105 ⇔ 109	On
						110 ⇔ 124	Random strobe, fast to slow
						125 ⇔ 129	On
						130 ⇔ 144	Random strobe 100–0%, fast to slow
						145 ⇔ 149	On
						150 ⇔ 164	Random strobe 0–100%, fast to slow
						165 ⇔ 169	On
						170 ⇔ 184	Pulse strobe, fast to slow
						185 ⇔ 189	On
						190 ⇔ 204	Random pulse strobe, fast to slow
						205 ⇔ 209	On
						210 ⇔ 224	Strobe 0–100–0%, fast to slow
						225 ⇔ 229	On
						230 ⇔ 244	Random pulse strobe, fast to slow
						245 ⇔ 255	On
15	16	15	17	17	**Zoom**	000 ⇔ 255	Wide to narrow

B	B2	S	A	T	Function	Value	Percent/Setting
						000 ⇔ 009	No function
						010 ⇔ 014	Blackout on pan/tilt
						015 ⇔ 019	Reserved for future use
						020 ⇔ 024	RGBW color mixing mode
						025 ⇔ 029	CMY color mixing mode (R=C, G=M, B=Y)
						030 ⇔ 049	Reserved for future use
						050 ⇔ 054	Pan reset
						055 ⇔ 059	Tilt reset
						060 ⇔ 064	Zoom reset
						065 ⇔ 069	Reserved for future use
						070 ⇔ 074	Reset all
16	**17**	**16**	**18**	**18**	**Control**	075 ⇔ 109	Reserved for future use
						110 ⇔ 114	Fast pan/tilt speed
						115 ⇔ 119	Slow pan/tilt speed
						120 ⇔ 124	Slow fan mode
						125 ⇔ 129	Full fan mode
						130 ⇔ 134	Auto fan mode
						135 ⇔ 139	Fast dimmer mode
						140 ⇔ 144	Slow dimmer mode
						145 ⇔ 223	Reserved for future use
						224 ⇔ 231	White mode on
						232 ⇔ 239	White mode off
						240 ⇔ 255	Reserved for future use
17	**18**	**17**	**19**	**19**	**Main red**	000 ⇔ 255	RGBW Mode: 0–100% / CMY Mode: 100–0%
–	**19**	**–**	**20**	**20**	**Main red fine**	000 ⇔ 255	RGBW Mode: 0–100% / CMY Mode: 100–0%
18	**20**	**18**	**21**	**21**	**Main green**	000 ⇔ 255	RGBW Mode: 0–100% / CMY Mode: 100–0%
–	**21**	**–**	**22**	**22**	**Main green fine**	000 ⇔ 255	RGBW Mode: 0–100% / CMY Mode: 100–0%
19	**22**	**19**	**23**	**23**	**Main blue**	000 ⇔ 255	RGBW Mode: 0–100% / CMY Mode: 100–0%
–	**23**	**–**	**24**	**24**	**Main blue fine**	000 ⇔ 255	RGBW Mode: 0–100% / CMY Mode: 100–0%
20	**24**	**20**	**25**	**25**	**Main white**	000 ⇔ 255	RGBW Mode: 0–100% / CMY Mode: 100–0%
–	**25**	**–**	**26**	**26**	**Main white fine**	000 ⇔ 255	RGBW Mode: 0–100% / CMY Mode: 100–0%
–	**–**	**–**	**–**	**27**	**Dimmer 1**	000 ⇔ 255	0–100%
–	**–**	**–**	**–**	**28**	**Dimmer fine 1**	000 ⇔ 255	0–100%
–	**–**	**21**	**27**	**29**	**Red 1**	000 ⇔ 255	RGBW Mode: 0–100% / CMY Mode: 100–0%
–	**–**	**–**	**28**	**30**	**Red fine 1**	000 ⇔ 255	RGBW Mode: 0–100% / CMY Mode: 100–0%
–	**–**	**22**	**29**	**31**	**Green 1**	000 ⇔ 255	RGBW Mode: 0–100% / CMY Mode: 100–0%
–	**–**	**–**	**30**	**32**	**Green fine 1**	000 ⇔ 255	RGBW Mode: 0–100% / CMY Mode: 100–0%
–	**–**	**23**	**31**	**33**	**Blue 1**	000 ⇔ 255	RGBW Mode: 0–100% / CMY Mode: 100–0%
–	**–**	**–**	**32**	**34**	**Blue fine 1**	000 ⇔ 255	RGBW Mode: 0–100% / CMY Mode: 100–0%
–	**–**	**24**	**33**	**35**	**White 1**	000 ⇔ 255	RGBW Mode: 0–100% / CMY Mode: 100–0%
–	**–**	**–**	**34**	**36**	**White fine 1**	000 ⇔ 255	RGBW Mode: 0–100% / CMY Mode: 100–0%
–	**–**	**–**	**–**	**37**	**Dimmer 2**	000 ⇔ 255	0–100%
–	**–**	**–**	**–**	**38**	**Dimmer fine 2**	000 ⇔ 255	0–100%
–	**–**	**25**	**35**	**39**	**Red 2**	000 ⇔ 255	RGBW Mode: 0–100% / CMY Mode: 100–0%
–	**–**	**–**	**36**	**40**	**Red fine 2**	000 ⇔ 255	RGBW Mode: 0–100% / CMY Mode: 100–0%
–	**–**	**26**	**37**	**41**	**Green 2**	000 ⇔ 255	RGBW Mode: 0–100% / CMY Mode: 100–0%

B	B2	S	A	T	Function	Value	Percent/Setting
–	–	–	38	42	Green fine 2	000 ⇔ 255	RGBW Mode: 0–100% / CMY Mode: 100–0%
–	–	27	39	43	Blue 2	000 ⇔ 255	RGBW Mode: 0–100% / CMY Mode: 100–0%
–	–	–	40	44	Blue fine 2	000 ⇔ 255	RGBW Mode: 0–100% / CMY Mode: 100–0%
–	–	28	41	45	White 2	000 ⇔ 255	RGBW Mode: 0–100% / CMY Mode: 100–0%
–	–	–	42	46	White fine 2	000 ⇔ 255	RGBW Mode: 0–100% / CMY Mode: 100–0%
–	–	–	–	47	Dimmer 3	000 ⇔ 255	0–100%
–	–	–	–	48	Dimmer fine 3	000 ⇔ 255	0–100%
–	–	29	43	49	Red 3	000 ⇔ 255	RGBW Mode: 0–100% / CMY Mode: 100–0%
–	–	–	44	50	Red fine 3	000 ⇔ 255	RGBW Mode: 0–100% / CMY Mode: 100–0%
–	–	30	45	51	Green 3	000 ⇔ 255	RGBW Mode: 0–100% / CMY Mode: 100–0%
–	–	–	46	52	Green fine 3	000 ⇔ 255	RGBW Mode: 0–100% / CMY Mode: 100–0%
–	–	31	47	53	Blue 3	000 ⇔ 255	RGBW Mode: 0–100% / CMY Mode: 100–0%
–	–	–	48	54	Blue fine 3	000 ⇔ 255	RGBW Mode: 0–100% / CMY Mode: 100–0%
–	–	32	49	55	White 3	000 ⇔ 255	RGBW Mode: 0–100% / CMY Mode: 100–0%
–	–	–	50	56	White fine 3	000 ⇔ 255	RGBW Mode: 0–100% / CMY Mode: 100–0%
–	–	–	–	57	Dimmer 4	000 ⇔ 255	0–100%
–	–	–	–	58	Dimmer fine 4	000 ⇔ 255	0–100%
–	–	33	51	59	Red 4	000 ⇔ 255	RGBW Mode: 0–100% / CMY Mode: 100–0%
–	–	–	52	60	Red fine 4	000 ⇔ 255	RGBW Mode: 0–100% / CMY Mode: 100–0%
–	–	34	53	61	Green 4	000 ⇔ 255	RGBW Mode: 0–100% / CMY Mode: 100–0%
–	–	–	54	62	Green fine 4	000 ⇔ 255	RGBW Mode: 0–100% / CMY Mode: 100–0%
–	–	35	55	63	Blue 4	000 ⇔ 255	RGBW Mode: 0–100% / CMY Mode: 100–0%
–	–	–	56	64	Blue fine 4	000 ⇔ 255	RGBW Mode: 0–100% / CMY Mode: 100–0%
–	–	36	57	65	White 4	000 ⇔ 255	RGBW Mode: 0–100% / CMY Mode: 100–0%
–	–	–	58	66	White fine 4	000 ⇔ 255	RGBW Mode: 0–100% / CMY Mode: 100–0%
–	–	–	–	67	Dimmer 5	000 ⇔ 255	0–100%
–	–	–	–	68	Dimmer fine 5	000 ⇔ 255	0–100%
–	–	37	59	69	Red 5	000 ⇔ 255	RGBW Mode: 0–100% / CMY Mode: 100–0%
–	–	–	60	70	Red fine 5	000 ⇔ 255	RGBW Mode: 0–100% / CMY Mode: 100–0%
–	–	38	61	71	Green 5	000 ⇔ 255	RGBW Mode: 0–100% / CMY Mode: 100–0%
–	–	–	62	72	Green fine 5	000 ⇔ 255	RGBW Mode: 0–100% / CMY Mode: 100–0%
–	–	39	63	73	Blue 5	000 ⇔ 255	RGBW Mode: 0–100% / CMY Mode: 100–0%
–	–	–	64	74	Blue fine 5	000 ⇔ 255	RGBW Mode: 0–100% / CMY Mode: 100–0%
–	–	40	65	75	White 5	000 ⇔ 255	RGBW Mode: 0–100% / CMY Mode: 100–0%
–	–	–	66	76	White fine 5	000 ⇔ 255	RGBW Mode: 0–100% / CMY Mode: 100–0%
–	–	–	–	77	Dimmer 6	000 ⇔ 255	0–100%
–	–	–	–	78	Dimmer fine 6	000 ⇔ 255	0–100%
–	–	41	67	79	Red 6	000 ⇔ 255	RGBW Mode: 0–100% / CMY Mode: 100–0%
–	–	–	68	80	Red fine 6	000 ⇔ 255	RGBW Mode: 0–100% / CMY Mode: 100–0%
–	–	42	69	81	Green 6	000 ⇔ 255	RGBW Mode: 0–100% / CMY Mode: 100–0%
–	–	–	70	82	Green fine 6	000 ⇔ 255	RGBW Mode: 0–100% / CMY Mode: 100–0%
–	–	43	71	83	Blue 6	000 ⇔ 255	RGBW Mode: 0–100% / CMY Mode: 100–0%
–	–	–	72	84	Blue fine 6	000 ⇔ 255	RGBW Mode: 0–100% / CMY Mode: 100–0%
–	–	44	73	85	White 6	000 ⇔ 255	RGBW Mode: 0–100% / CMY Mode: 100–0%
–	–	–	74	86	White fine 6	000 ⇔ 255	RGBW Mode: 0–100% / CMY Mode: 100–0%
–	–	–	–	87	Dimmer 7	000 ⇔ 255	0–100%

B	B2	S	A	T	Function	Value	Percent/Setting
–	–	–	–	88	Dimmer fine 7	000 ⇔ 255	0–100%
–	–	45	75	89	Red 7	000 ⇔ 255	RGBW Mode: 0–100% / CMY Mode: 100–0%
–	–	–	76	90	Red fine 7	000 ⇔ 255	RGBW Mode: 0–100% / CMY Mode: 100–0%
–	–	46	77	91	Green 7	000 ⇔ 255	RGBW Mode: 0–100% / CMY Mode: 100–0%
–	–	–	78	92	Green fine 7	000 ⇔ 255	RGBW Mode: 0–100% / CMY Mode: 100–0%
–	–	47	79	93	Blue 7	000 ⇔ 255	RGBW Mode: 0–100% / CMY Mode: 100–0%
–	–	–	80	94	Blue fine 7	000 ⇔ 255	RGBW Mode: 0–100% / CMY Mode: 100–0%
–	–	48	81	95	White 7	000 ⇔ 255	RGBW Mode: 0–100% / CMY Mode: 100–0%
–	–	–	82	96	White fine 7	000 ⇔ 255	RGBW Mode: 0–100% / CMY Mode: 100–0%
–	–	–	–	97	Dimmer 8	000 ⇔ 255	0–100%
–	–	–	–	98	Dimmer fine 8	000 ⇔ 255	0–100%
–	–	49	83	99	Red 8	000 ⇔ 255	RGBW Mode: 0–100% / CMY Mode: 100–0%
–	–	–	84	100	Red fine 8	000 ⇔ 255	RGBW Mode: 0–100% / CMY Mode: 100–0%
–	–	50	85	101	Green 8	000 ⇔ 255	RGBW Mode: 0–100% / CMY Mode: 100–0%
–	–	–	86	102	Green fine 8	000 ⇔ 255	RGBW Mode: 0–100% / CMY Mode: 100–0%
–	–	51	87	103	Blue 8	000 ⇔ 255	RGBW Mode: 0–100% / CMY Mode: 100–0%
–	–	–	88	104	Blue fine 8	000 ⇔ 255	RGBW Mode: 0–100% / CMY Mode: 100–0%
–	–	52	89	105	White 8	000 ⇔ 255	RGBW Mode: 0–100% / CMY Mode: 100–0%
–	–	–	90	106	White fine 8	000 ⇔ 255	RGBW Mode: 0–100% / CMY Mode: 100–0%
–	–	–	–	107	Dimmer 9	000 ⇔ 255	0–100%
–	–	–	–	108	Dimmer fine 9	000 ⇔ 255	0–100%
–	–	53	91	109	Red 9	000 ⇔ 255	RGBW Mode: 0–100% / CMY Mode: 100–0%
–	–	–	92	110	Red fine 9	000 ⇔ 255	RGBW Mode: 0–100% / CMY Mode: 100–0%
–	–	54	93	111	Green 9	000 ⇔ 255	RGBW Mode: 0–100% / CMY Mode: 100–0%
–	–	–	94	112	Green fine 9	000 ⇔ 255	RGBW Mode: 0–100% / CMY Mode: 100–0%
–	–	55	95	113	Blue 9	000 ⇔ 255	RGBW Mode: 0–100% / CMY Mode: 100–0%
–	–	–	96	114	Blue fine 9	000 ⇔ 255	RGBW Mode: 0–100% / CMY Mode: 100–0%
–	–	56	97	115	White 9	000 ⇔ 255	RGBW Mode: 0–100% / CMY Mode: 100–0%
–	–	–	98	116	White fine 9	000 ⇔ 255	RGBW Mode: 0–100% / CMY Mode: 100–0%
–	–	–	–	117	Dimmer 10	000 ⇔ 255	0–100%
–	–	–	–	118	Dimmer fine 10	000 ⇔ 255	0–100%
–	–	57	99	119	Red 10	000 ⇔ 255	RGBW Mode: 0–100% / CMY Mode: 100–0%
–	–	–	100	120	Red fine 10	000 ⇔ 255	RGBW Mode: 0–100% / CMY Mode: 100–0%
–	–	58	101	121	Green 10	000 ⇔ 255	RGBW Mode: 0–100% / CMY Mode: 100–0%
–	–	–	102	122	Green fine 10	000 ⇔ 255	RGBW Mode: 0–100% / CMY Mode: 100–0%
–	–	59	103	123	Blue 10	000 ⇔ 255	RGBW Mode: 0–100% / CMY Mode: 100–0%
–	–	–	104	124	Blue fine 10	000 ⇔ 255	RGBW Mode: 0–100% / CMY Mode: 100–0%
–	–	60	105	125	White 10	000 ⇔ 255	RGBW Mode: 0–100% / CMY Mode: 100–0%
–	–	–	106	126	White fine 10	000 ⇔ 255	RGBW Mode: 0–100% / CMY Mode: 100–0%
–	–	–	–	127	Dimmer 11	000 ⇔ 255	0–100%
–	–	–	–	128	Dimmer fine 11	000 ⇔ 255	0–100%
–	–	61	107	129	Red 11	000 ⇔ 255	RGBW Mode: 0–100% / CMY Mode: 100–0%
–	–	–	108	130	Red fine 11	000 ⇔ 255	RGBW Mode: 0–100% / CMY Mode: 100–0%
–	–	62	109	131	Green 11	000 ⇔ 255	RGBW Mode: 0–100% / CMY Mode: 100–0%
–	–	–	110	132	Green fine 11	000 ⇔ 255	RGBW Mode: 0–100% / CMY Mode: 100–0%
–	–	63	111	133	Blue 11	000 ⇔ 255	RGBW Mode: 0–100% / CMY Mode: 100–0%

B	B2	S	A	T	Function	Value	Percent/Setting
–	–	–	112	134	**Blue fine 11**	000 ⇔ 255	RGBW Mode: 0–100% / CMY Mode: 100–0%
–	–	64	113	135	**White 11**	000 ⇔ 255	RGBW Mode: 0–100% / CMY Mode: 100–0%
–	–	–	114	136	**White fine 11**	000 ⇔ 255	RGBW Mode: 0–100% / CMY Mode: 100–0%
–	–	–	–	137	**Dimmer 12**	000 ⇔ 255	0–100%
–	–	–	–	138	**Dimmer fine 12**	000 ⇔ 255	0–100%
–	–	65	115	139	**Red 12**	000 ⇔ 255	RGBW Mode: 0–100% / CMY Mode: 100–0%
–	–	–	116	140	**Red fine 12**	000 ⇔ 255	RGBW Mode: 0–100% / CMY Mode: 100–0%
–	–	66	117	141	**Green 12**	000 ⇔ 255	RGBW Mode: 0–100% / CMY Mode: 100–0%
–	–	–	118	142	**Green fine 12**	000 ⇔ 255	RGBW Mode: 0–100% / CMY Mode: 100–0%
–	–	67	119	143	**Blue 12**	000 ⇔ 255	RGBW Mode: 0–100% / CMY Mode: 100–0%
–	–	–	120	144	**Blue fine 12**	000 ⇔ 255	RGBW Mode: 0–100% / CMY Mode: 100–0%
–	–	68	121	145	**White 12**	000 ⇔ 255	RGBW Mode: 0–100% / CMY Mode: 100–0%
–	–	–	122	146	**White fine 12**	000 ⇔ 255	RGBW Mode: 0–100% / CMY Mode: 100–0%

Dual Control Movement Values

B: Basic (8 channels), S: Standard (20 channels), A: Advanced (26 channels)

B	S	A	Function	Value	Percent/Setting
1	1	1	**Pan**	000 ⇔ 255	0–100%
2	2	2	**Pan fine**	000 ⇔ 255	0–100%
3	3	3	**Tilt**	000 ⇔ 255	0–100%
4	4	4	**Tilt fine**	000 ⇔ 255	0–100%
–	5	5	**CTC**	000	No function
				001 ⇔ 255	Color temperature, 10000–2800 K
–	6	6	**Color macro**	000	No function
				001 ⇔ 255	Color macros
–	7	7	**Gobo**	000	No function
				001 ⇔ 168	Gobos (indexed)
				169 ⇔ 255	No function
–	8	8	**LED macro/ Auto program**	000 ⇔ 015	No function
				016 ⇔ 085	LED macros
				086 ⇔ 135	Cycles all macros
				136 ⇔ 205	Auto programs
				206 ⇔ 255	Cycles all automatic programs
–	9	9	**LED macro/ Auto program speed**	000 ⇔ 127	Auto speed, fast to slow
				128	Hold
				129 ⇔ 255	Auto speed, slow to fast
–	10	10	**LED macro delay**	000 ⇔ 255	Fast to slow
–	11	11	**Background color**	000	No function
				001 ⇔ 002	2700K R: 156 G: 118 B: 0 W: 63
				003 ⇔ 004	3200K R: 156 G: 141 B: 5 W: 89
				005 ⇔ 006	4200K R: 156 G: 141 B: 14 W: 255
				007 ⇔ 008	5600K R: 156 G: 207 B: 54 W: 255
				009 ⇔ 010	8000K R: 130 G: 255 B: 96 W: 255
				011	Blue R: 0 G: 0 B: 255 W: 0
				012 ⇔ 048	+ Green R: 0 G: 0–255 B: 255 W: 0
				049	Cyan R: 0 G: 255 B: 255 W: 0
				050 ⇔ 086	- Blue R: 0 G: 255 B: 255–0 W: 0
				087	Green R: 0 G: 255 B: 0 W: 0
				088 ⇔ 124	+ Red R: 0–255 G: 255 B: 0 W: 0
				125	Yellow R: 255 G: 255 B: 0 W: 0
				126 ⇔ 162	- Green R: 255 G: 255–0 B: 0 W: 0
				163	Red R: 255 G: 0 B: 0 W: 0
				164 ⇔ 200	+ Blue R: 255 G: 0 B: 0–255 W: 0
				201	Magenta R: 255 G: 0 B: 255 W: 0
				202 ⇔ 238	- Red R: 255–0 G: 0 B: 255 W: 0
				239	Blue R: 0 G: 0 B: 255 W: 0
				240 ⇔ 247	Color fade, fast to slow
				248 ⇔ 255	Color snap, fast to slow
–	12	12	**Background dimmer**	000 ⇔ 255	0–100%
–	–	13	**Background fine dimmer**	000 ⇔ 255	0–100%
5	13	14	**Main dimmer**	000 ⇔ 255	0–100%

B	S	A	Function	Value	Percent/Setting
–	–	15	**Main fine dimmer**	000 ⇔ 255	0–100%
6	14	16	**Shutter**	000 ⇔ 019	Off
				020 ⇔ 024	On
				025 ⇔ 064	Strobe, fast to slow
				065 ⇔ 069	On
				070 ⇔ 084	Strobe 100–0%, fast to slow
				085 ⇔ 089	On
				090 ⇔ 104	Strobe 0–100%, fast to slow
				105 ⇔ 109	On
				110 ⇔ 124	Random strobe, fast to slow
				125 ⇔ 129	On
				130 ⇔ 144	Random strobe 100–0%, fast to slow
				145 ⇔ 149	On
				150 ⇔ 164	Random strobe 0–100%, fast to slow
				165 ⇔ 169	On
				170 ⇔ 184	Pulse strobe, fast to slow
				185 ⇔ 189	On
				190 ⇔ 204	Random pulse strobe, fast to slow
				205 ⇔ 209	On
				210 ⇔ 224	Strobe 0–100–0%, fast to slow
				225 ⇔ 229	On
				230 ⇔ 244	Random pulse strobe, fast to slow
				245 ⇔ 255	On
7	15	17	**Zoom**	000 ⇔ 255	Wide to narrow

B	S	A	Function	Value	Percent/Setting
8	16	18	**Control**	000 ⇔ 009	No function
				010 ⇔ 014	Blackout on pan/tilt
				015 ⇔ 019	Reserved for future use
				020 ⇔ 024	RGBW color mixing mode
				025 ⇔ 029	CMY color mixing mode (R=C, G=M, B=Y)
				030 ⇔ 049	Reserved for future use
				050 ⇔ 054	Pan reset
				055 ⇔ 059	Tilt reset
				060 ⇔ 064	Zoom reset
				065 ⇔ 069	Reserved for future use
				070 ⇔ 074	Reset all
				075 ⇔ 109	Reserved for future use
				110 ⇔ 114	Fast pan/tilt speed
				115 ⇔ 119	Slow pan/tilt speed
				120 ⇔ 124	Slow fan mode
				125 ⇔ 129	Full fan mode
				130 ⇔ 134	Auto fan mode
				135 ⇔ 139	Fast dimmer mode
				140 ⇔ 144	Slow dimmer mode
				145 ⇔ 223	Reserved for future use
				224 ⇔ 231	White mode on
				232 ⇔ 239	White mode off
				240 ⇔ 255	Reserved for future use
–	17	19	**Main red**	000 ⇔ 255	RGBW Mode: 0–100% / CMY Mode: 100–0%
–	–	20	**Main red fine**	000 ⇔ 255	RGBW Mode: 0–100% / CMY Mode: 100–0%
–	18	21	**Main green**	000 ⇔ 255	RGBW Mode: 0–100% / CMY Mode: 100–0%
–	–	22	**Main green fine**	000 ⇔ 255	RGBW Mode: 0–100% / CMY Mode: 100–0%
–	19	23	**Main blue**	000 ⇔ 255	RGBW Mode: 0–100% / CMY Mode: 100–0%
–	–	24	**Main blue fine**	000 ⇔ 255	RGBW Mode: 0–100% / CMY Mode: 100–0%
–	20	25	**Main white**	000 ⇔ 255	RGBW Mode: 0–100% / CMY Mode: 100–0%
–	–	26	**Main white fine**	000 ⇔ 255	RGBW Mode: 0–100% / CMY Mode: 100–0%

Dual Control Pixels Values

B: Basic (36 channels), S: Standard (48 channels), A: Advanced (96 channels)

B	S	A	Function	Value	Percent/Setting
1	1	1	Red 1	000 ⇔ 255	RGBW Mode: 0–100% / CMY Mode: 100–0%
–	–	2	Red fine 1	000 ⇔ 255	RGBW Mode: 0–100% / CMY Mode: 100–0%
2	2	3	Green 1	000 ⇔ 255	RGBW Mode: 0–100% / CMY Mode: 100–0%
–	–	4	Green fine 1	000 ⇔ 255	RGBW Mode: 0–100% / CMY Mode: 100–0%
3	3	5	Blue 1	000 ⇔ 255	RGBW Mode: 0–100% / CMY Mode: 100–0%
–	–	6	Blue fine 1	000 ⇔ 255	RGBW Mode: 0–100% / CMY Mode: 100–0%
–	4	7	White 1	000 ⇔ 255	RGBW Mode: 0–100% / CMY Mode: 100–0%
–	–	8	White fine 1	000 ⇔ 255	RGBW Mode: 0–100% / CMY Mode: 100–0%
4	5	9	Red 2	000 ⇔ 255	RGBW Mode: 0–100% / CMY Mode: 100–0%
–	–	10	Red fine 2	000 ⇔ 255	RGBW Mode: 0–100% / CMY Mode: 100–0%
5	6	11	Green 2	000 ⇔ 255	RGBW Mode: 0–100% / CMY Mode: 100–0%
–	–	12	Green fine 2	000 ⇔ 255	RGBW Mode: 0–100% / CMY Mode: 100–0%
6	7	13	Blue 2	000 ⇔ 255	RGBW Mode: 0–100% / CMY Mode: 100–0%
–	–	14	Blue fine 2	000 ⇔ 255	RGBW Mode: 0–100% / CMY Mode: 100–0%
–	8	15	White 2	000 ⇔ 255	RGBW Mode: 0–100% / CMY Mode: 100–0%
–	–	16	White fine 2	000 ⇔ 255	RGBW Mode: 0–100% / CMY Mode: 100–0%
7	9	17	Red 3	000 ⇔ 255	RGBW Mode: 0–100% / CMY Mode: 100–0%
–	–	18	Red fine 3	000 ⇔ 255	RGBW Mode: 0–100% / CMY Mode: 100–0%
8	10	19	Green 3	000 ⇔ 255	RGBW Mode: 0–100% / CMY Mode: 100–0%
–	–	20	Green fine 3	000 ⇔ 255	RGBW Mode: 0–100% / CMY Mode: 100–0%
9	11	21	Blue 3	000 ⇔ 255	RGBW Mode: 0–100% / CMY Mode: 100–0%
–	–	22	Blue fine 3	000 ⇔ 255	RGBW Mode: 0–100% / CMY Mode: 100–0%
–	12	23	White 3	000 ⇔ 255	RGBW Mode: 0–100% / CMY Mode: 100–0%
–	–	24	White fine 3	000 ⇔ 255	RGBW Mode: 0–100% / CMY Mode: 100–0%
10	13	25	Red 4	000 ⇔ 255	RGBW Mode: 0–100% / CMY Mode: 100–0%
–	–	26	Red fine 4	000 ⇔ 255	RGBW Mode: 0–100% / CMY Mode: 100–0%
11	14	27	Green 4	000 ⇔ 255	RGBW Mode: 0–100% / CMY Mode: 100–0%
–	–	28	Green fine 4	000 ⇔ 255	RGBW Mode: 0–100% / CMY Mode: 100–0%
12	15	29	Blue 4	000 ⇔ 255	RGBW Mode: 0–100% / CMY Mode: 100–0%
–	–	30	Blue fine 4	000 ⇔ 255	RGBW Mode: 0–100% / CMY Mode: 100–0%
–	16	31	White 4	000 ⇔ 255	RGBW Mode: 0–100% / CMY Mode: 100–0%
–	–	32	White fine 4	000 ⇔ 255	RGBW Mode: 0–100% / CMY Mode: 100–0%
13	17	33	Red 5	000 ⇔ 255	RGBW Mode: 0–100% / CMY Mode: 100–0%
–	–	34	Red fine 5	000 ⇔ 255	RGBW Mode: 0–100% / CMY Mode: 100–0%
14	18	35	Green 5	000 ⇔ 255	RGBW Mode: 0–100% / CMY Mode: 100–0%
–	–	36	Green fine 5	000 ⇔ 255	RGBW Mode: 0–100% / CMY Mode: 100–0%
15	19	37	Blue 5	000 ⇔ 255	RGBW Mode: 0–100% / CMY Mode: 100–0%
–	–	38	Blue fine 5	000 ⇔ 255	RGBW Mode: 0–100% / CMY Mode: 100–0%
–	20	39	White 5	000 ⇔ 255	RGBW Mode: 0–100% / CMY Mode: 100–0%
–	–	40	White fine 5	000 ⇔ 255	RGBW Mode: 0–100% / CMY Mode: 100–0%
16	21	41	Red 6	000 ⇔ 255	RGBW Mode: 0–100% / CMY Mode: 100–0%
–	–	42	Red fine 6	000 ⇔ 255	RGBW Mode: 0–100% / CMY Mode: 100–0%
17	22	43	Green 6	000 ⇔ 255	RGBW Mode: 0–100% / CMY Mode: 100–0%
–	–	44	Green fine 6	000 ⇔ 255	RGBW Mode: 0–100% / CMY Mode: 100–0%

B	S	A	Function	Value	Percent/Setting
18	23	45	Blue 6	000 ⇔ 255	RGBW Mode: 0–100% / CMY Mode: 100–0%
–	–	46	Blue fine 6	000 ⇔ 255	RGBW Mode: 0–100% / CMY Mode: 100–0%
–	24	47	White 6	000 ⇔ 255	RGBW Mode: 0–100% / CMY Mode: 100–0%
–	–	48	White fine 6	000 ⇔ 255	RGBW Mode: 0–100% / CMY Mode: 100–0%
19	25	49	Red 7	000 ⇔ 255	RGBW Mode: 0–100% / CMY Mode: 100–0%
–	–	50	Red fine 7	000 ⇔ 255	RGBW Mode: 0–100% / CMY Mode: 100–0%
20	26	51	Green 7	000 ⇔ 255	RGBW Mode: 0–100% / CMY Mode: 100–0%
–	–	52	Green fine 7	000 ⇔ 255	RGBW Mode: 0–100% / CMY Mode: 100–0%
21	27	53	Blue 7	000 ⇔ 255	RGBW Mode: 0–100% / CMY Mode: 100–0%
–	–	54	Blue fine 7	000 ⇔ 255	RGBW Mode: 0–100% / CMY Mode: 100–0%
–	28	55	White 7	000 ⇔ 255	RGBW Mode: 0–100% / CMY Mode: 100–0%
–	–	56	White fine 7	000 ⇔ 255	RGBW Mode: 0–100% / CMY Mode: 100–0%
22	29	57	Red 8	000 ⇔ 255	RGBW Mode: 0–100% / CMY Mode: 100–0%
–	–	58	Red fine 8	000 ⇔ 255	RGBW Mode: 0–100% / CMY Mode: 100–0%
23	30	59	Green 8	000 ⇔ 255	RGBW Mode: 0–100% / CMY Mode: 100–0%
–	–	60	Green fine 8	000 ⇔ 255	RGBW Mode: 0–100% / CMY Mode: 100–0%
24	31	61	Blue 8	000 ⇔ 255	RGBW Mode: 0–100% / CMY Mode: 100–0%
–	–	62	Blue fine 8	000 ⇔ 255	RGBW Mode: 0–100% / CMY Mode: 100–0%
–	32	63	White 8	000 ⇔ 255	RGBW Mode: 0–100% / CMY Mode: 100–0%
–	–	64	White fine 8	000 ⇔ 255	RGBW Mode: 0–100% / CMY Mode: 100–0%
25	33	65	Red 9	000 ⇔ 255	RGBW Mode: 0–100% / CMY Mode: 100–0%
–	–	66	Red fine 9	000 ⇔ 255	RGBW Mode: 0–100% / CMY Mode: 100–0%
26	34	67	Green 9	000 ⇔ 255	RGBW Mode: 0–100% / CMY Mode: 100–0%
–	–	68	Green fine 9	000 ⇔ 255	RGBW Mode: 0–100% / CMY Mode: 100–0%
27	35	69	Blue 9	000 ⇔ 255	RGBW Mode: 0–100% / CMY Mode: 100–0%
–	–	70	Blue fine 9	000 ⇔ 255	RGBW Mode: 0–100% / CMY Mode: 100–0%
–	36	71	White 9	000 ⇔ 255	RGBW Mode: 0–100% / CMY Mode: 100–0%
–	–	72	White fine 9	000 ⇔ 255	RGBW Mode: 0–100% / CMY Mode: 100–0%
28	37	73	Red 10	000 ⇔ 255	RGBW Mode: 0–100% / CMY Mode: 100–0%
–	–	74	Red fine 10	000 ⇔ 255	RGBW Mode: 0–100% / CMY Mode: 100–0%
29	38	75	Green 10	000 ⇔ 255	RGBW Mode: 0–100% / CMY Mode: 100–0%
–	–	76	Green fine 10	000 ⇔ 255	RGBW Mode: 0–100% / CMY Mode: 100–0%
30	39	77	Blue 10	000 ⇔ 255	RGBW Mode: 0–100% / CMY Mode: 100–0%
–	–	78	Blue fine 10	000 ⇔ 255	RGBW Mode: 0–100% / CMY Mode: 100–0%
–	40	79	White 10	000 ⇔ 255	RGBW Mode: 0–100% / CMY Mode: 100–0%
–	–	80	White fine 10	000 ⇔ 255	RGBW Mode: 0–100% / CMY Mode: 100–0%
31	41	81	Red 11	000 ⇔ 255	RGBW Mode: 0–100% / CMY Mode: 100–0%
–	–	82	Red fine 11	000 ⇔ 255	RGBW Mode: 0–100% / CMY Mode: 100–0%
32	42	83	Green 11	000 ⇔ 255	RGBW Mode: 0–100% / CMY Mode: 100–0%
–	–	84	Green fine 11	000 ⇔ 255	RGBW Mode: 0–100% / CMY Mode: 100–0%
33	43	85	Blue 11	000 ⇔ 255	RGBW Mode: 0–100% / CMY Mode: 100–0%
–	–	86	Blue fine 11	000 ⇔ 255	RGBW Mode: 0–100% / CMY Mode: 100–0%
–	44	87	White 11	000 ⇔ 255	RGBW Mode: 0–100% / CMY Mode: 100–0%
–	–	88	White fine 11	000 ⇔ 255	RGBW Mode: 0–100% / CMY Mode: 100–0%
34	45	89	Red 12	000 ⇔ 255	RGBW Mode: 0–100% / CMY Mode: 100–0%
–	–	90	Red fine 12	000 ⇔ 255	RGBW Mode: 0–100% / CMY Mode: 100–0%

B	S	A	Function	Value	Percent/Setting
35	**46**	**91**	**Green 12**	000 ⇔ 255	RGBW Mode: 0–100% / CMY Mode: 100–0%
–	**–**	**92**	**Green fine 12**	000 ⇔ 255	RGBW Mode: 0–100% / CMY Mode: 100–0%
36	**47**	**93**	**Blue 12**	000 ⇔ 255	RGBW Mode: 0–100% / CMY Mode: 100–0%
–	**–**	**94**	**Blue fine 12**	000 ⇔ 255	RGBW Mode: 0–100% / CMY Mode: 100–0%
–	**48**	**95**	**White 12**	000 ⇔ 255	RGBW Mode: 0–100% / CMY Mode: 100–0%
–	**–**	**96**	**White fine 12**	000 ⇔ 255	RGBW Mode: 0–100% / CMY Mode: 100–0%

Settings Configuration

Pan Reverse

To set the orientation of the pan:

1. Go to the **Settings** main level.
2. Select the **Pan Reverse** option.
3. Select from **NO** (normal pan motion), or **YES** (reversed pan motion).

Tilt Reverse

To set the orientation of the tilt:

1. Go to the **Settings** main level.
2. Select the **Tilt Reverse** option.
3. Select from **NO** (normal tilt motion), or **YES** (reversed tilt motion).

Zoom Reverse

To set the orientation of the zoom:

1. Go to the **Settings** main level.
2. Select the **Zoom Reverse** option.
3. Select from **NO** (normal zoom), or **YES** (reversed zoom).

Screen Reverse

To set the orientation of the display:

1. Go to the **Settings** main level.
2. Select the **Screen Reverse** option.
3. Select from **NO** (right-side up), **YES** (upside-down), or **AUTO** (automatic orientation).

Pan Angle

To set the maximum angle of the pan:

1. Go to the **Settings** main level.
2. Select the **Pan Angle** option.
3. Select from **540** (540°), **360** (360°), or **180** (180°).

Tilt Angle

To set the maximum angle of the tilt:

1. Go to the **Settings** main level.
2. Select the **Tilt Angle** option.
3. Select from **270** (260°), **180** (180°), or **090** (90°).

Black out on Movement

To set the product to black out while the pan/tilt, color wheel, or gobo wheels are moving:

1. Go to the **Settings** main level.
2. Select the **BL. O. P/T Move** option.
3. Select from **NO** or **YES**.

Calibration

To set the calibration:

1. Go to the **Settings** main level.
2. Select the **Calibration** option.
3. Select from **NO** or **YES**.

Touchscreen Lock

1. Go to the **Settings** main level.
2. Select the **Touchscreen Lock** option.
3. Select from **NO** or **YES**.

Lock Screen

To swap the controls for the pan and tilt:

1. Go to the **Settings** main level.
2. Select the **Lock Screen** option.
3. Select from **NO** or **YES**.

Swap Pan and Tilt

To swap the controls for the pan and tilt:

1. Go to the **Settings** main level.
2. Select the **Swap XY** option.
3. Select from **NO** (pan controls pan, tilt controls tilt) or **YES** (pan controls tilt, tilt controls pan).

WDMX Reset

To reset the WDMX connection:

1. Go to the **Settings** main level.
2. Select the **WDMX Reset** option.
3. Select from **NO** or **YES**.

Display Backlight Timer

To set how long before an inactive display will turn off:

1. Go to the **Settings** main level.
2. Select the **Backlight Timer** option.
3. Select the length of the backlight timer, from **30S** (30 seconds), **1M** (1 minute), **5M** (5 minutes), or **ON** (always on).

Loss of Data

To select how the product will respond to a loss of the control signal:

1. Go to the **Settings** main level.
2. Select the **Loss of Data** option.
3. Select from **Hold** (holds last signal received) or **Close** (blacks out fixture).

Fan speed

To set the speed of the fans:

1. Go to the **Settings** main level.
2. Select the **Fans** option.
3. Select from **Auto** (fan speed set according to product temperature), **Full** (maximum speed),**ECO** (quiet fans mode), **TV25** (maintains temperature of 77°F /25°C), or **TV35** (maintains temperature of 95°F / 35°C).

Color mixing mode

To set the color mixing mode:

1. Go to the **Settings** main level.
2. Select the **C Mixing Mode** option.
3. Select **RGBW** (additive mode: red, green, blue, and white), or **CMY** (subtractive mode: red controls cyan, green controls magenta, blue controls yellow).

Dimmer curve

To set the dimmer curve:

1. Go to the **Settings** main level.
2. Select the **Dimmer Curve** option.
3. Select the **Linear**, **Square**, **I Squa**, or **SCurve**.

Dimmer speed

To set the dimmer speed:

1. Go to the **Settings** main level.
2. Select the **Dimmer speed** option.
3. Select **Smooth** or **Fast**.

Pulse Width Modulation

To adjust the frequency of the pulse width modulation:

1. Go to the **Settings** main level.
2. Select the **PWM Options** option.
3. Select **600Hz**, **1200Hz**, **2000Hz**, **4000Hz**, **6000Hz**, or **15000Hz**.

Color balance

To set the maximum values of a given color in the mix:

1. Go to the **Settings** main level.
2. Select the **Color Balance** option.
3. Select from **Red**, **Green**, **Blue**, or **White** options.
4. Select a value from **100–255**

Calibrated White

To set the white mode:

1. Go to the **Settings** main level.
2. Select the **Calibrated White** option.
3. Select from **ON** (uses the factory-calibrated white balance), **OFF** (uses the maximum white values), or **Custom** (uses the custom white values defined under **White Balance**)

White Balance

To set the custom white balance:

1. Go to the **Settings** main level.
2. Select the **White Balance** option.
3. Select from **Red**, **Green**, **Blue**, or **White**.
4. Select a value from **000–255**

Preset select

This option saves three different preset menu option configurations. To record and set these presets, follow the instructions below:

1. Go to the **Settings** main level.
2. Select the **Preset Select** option.
3. Select from **PRESET A**, **PRESET B**, or **PRESET C**.
4. The product will reset. Any changes made to the menu options will be saved to this preset.

- Default is **PRESET A**. Once changes are made inside **PRESET A**, those changes are saved to **PRESET A** without having to do anything.
- To create a new preset, highlight and select **PRESET SELECT**. Highlight **PRESET B** or **PRESET C** and press **<ENTER>**. The product will reset automatically. Go back and make the necessary changes in the menu. This will automatically save to the present preset.

Preset sync

To sync all menu presets to other Maverick Force 2 BeamWashes:

1. Go to the **Settings** main level.
2. Select the **Preset Sync** option.
3. Select **NO** or **YES**.

- **To sync other Maverick Force 2 BeamWashes, connect those products via DMX cable.**
- **The product can be in any control mode except WDMX. ArtNet, DMX, sACN are all acceptable.**
- **All menu options are transferred, including the DMX address. Only the IP address in not affected in the other products.**

Only connect Maverick Force 2 BeamWash.

USB Update

To enable or disable software update using USB:

1. Go to the **Settings** main level.
2. Select the **USB Update** option.
3. Select **NO** (disables software update through USB) or **YES** (enables software update through USB).

See the USB Software Update section for the detailed instructions on how to update the Maverick Force 2 BeamWash software using a USB C connection.

Reset functions

To reset the pan, tilt, or all functions as if from startup:

1. Go to the **Settings** main level.
2. Select the **Reset Function**.
3. Select from **Pan**/ **Tilt, Zoom,** or **All**.
4. Select from **NO** or **YES**.

Factory Reset

To reset the product to factory settings:

1. Go to the **Settings** main level.
2. Select the **Factory Settings** option.
3. Select **NO** (to cancel) or **YES** (to reset the product configuration).

Test Mode

Auto Test

To have the Maverick Force 2 BeamWash automatically test all functions one after the other:

1. Go to the **Test** main level.
2. Select the **Auto Test** option.

Manual Test

To manually test an individual function of the Maverick Force 2 BeamWash:

1. Go to the **Test** main level.
2. Select the **Manual Test** option.
3. Select a function to test, from **Pan**, **Tilt**, **Red, Green, Blue, White, CTC, Color, Pattern, LED Macro, LED Ma. Speed, LED Ma. Fade, Background, Background Dim**, **Dimmer**, **Shutter**, **Function,** or **Zoom**.
4. Increase or decrease the value of the selected function from **0–255** to test it.

System Information

The information section of the menu displays statistics and the current status of the product's various functions. To view this information:

1. Go to the **Information** main level.
2. Select from the **Fixture Information**, **Fan Information**, **Error Information**, or **Channel Information** options.
3. Use **<UP>** and **<DOWN>** to view all information.

Zero Adjust Mode

The Zero Adjust Mode provides fine adjustments for the home position of every moving part in the optical path as well as the pan and tilt movements. To adjust these options and prevent borders showing or reduction of the light output:

1. From the main level screen, press and hold **<MENU>** until the passcode screen appears.
2. Enter the passcode: **0920** and press **<ENTER>**.
3. Select the "zero" position to adjust, from **PAN**, **TILT**, **ZOOM, MAC4, MAC5, MAC6, RDM4, RDM5, RDM6**.
4. Adjust the "zero" position for the selected function from **000–255**.

Web Server

The Maverick Force 2 BeamWash Web Server can be accessed by any computer on the same network as the product. It allows network access to system information, settings such as control setup, manual testing of all functions, firmware updates, and the ability to change the Web Server password.

1. Connect the product to power, and set the Control Mode to **ArtNet** and the **IP Mode** to **Static**.
2. Connect the product to a Windows computer with a network cable.
3. On the computer, set the first value of the IP address of the new network to match the first value of the IP address of the product. The IP address of the product is displayed on the Home Screen.
4. Enter the IP address of the product into the URL bar of a web browser on the computer.
5. Enter both the User Name and Password as **admin** to log in.

Information

The Information page on the Web Server displays the current settings and the system information of the Maverick Force 2 BeamWash.

Setup

The Setup page on the Web Server provides options for control, similar to the **Setup** menu on the product. Click **Save Settings** to send the new configuration to the product.

Manual Test

The Manual Test page on the Web Server allows all output functions of the product to be controlled through the browser. To set all functions back to default, click **Reset**.

Firmware Update

The Upgrade page on the Web Server allows the product to be updated with the latest firmware. Go to https://www.chauvetprofessional.com to download firmware updates.

Security

The Security page on the Web Server gives the option to change the password to the connected product's web server. Enter the old password (**admin**, by default) and the new password twice, then click **Save Settings** to change the password.

5. Maintenance

Product Maintenance

Dust build-up reduces light output performance and can cause overheating. This can lead to reduction of the light source's life and/or mechanical wear. To maintain optimum performance and minimize wear, clean all lighting products at least twice a month. However, be aware that usage and environmental conditions could be contributing factors to increase the cleaning frequency.

To clean the product, follow the instructions below:

1. Unplug the product from power.
2. Wait until the product is at room temperature.
3. Use a vacuum (or dry compressed air) and a soft brush to remove dust collected on the external surface/vents.
4. Clean all transparent surfaces with a mild soap solution, ammonia-free glass cleaner, or isopropyl alcohol.
5. Apply the solution directly to a soft, lint free cotton cloth or a lens cleaning tissue.
6. Softly drag any dirt or grime to the outside of the transparent surface.
7. Gently polish the transparent surfaces until they are free of haze and lint.

Always dry the transparent surfaces carefully after cleaning them.

Do not spin the cooling fans with compressed air. Damage may result.

6. Technical Specifications

Dimensions and Weight

Length	Width	Height	Weight
12.91 in (328 mm)	12.60 in (230 mm)	17.09 in (434 mm)	29.6 lb (13.5 kg)

Note: Dimensions in inches are rounded.

Power

Power Supply Type	Range	Voltage Selection
Switching (internal)	100 to 240 VAC, 50/60 Hz	Auto-ranging

Parameter	100 V, 60 Hz	120 V, 60 Hz	208 V, 60 Hz	230 V, 50 Hz	240 V, 60 Hz
Consumption	630 W	620 W	603 W	600 W	597 W
Operating Current	6.35 A	5.23 A	2.96 A	2.68 A	2.55 A
Fuse/Breaker	F 10 A, 250 V	F 10 A, 250 V	F 10 A, 250 V	F 12 0, 250 V	F 10 A, 250 V

Power I/O	U.S./Worldwide	UK/Europe
Power Input Connector	Seetronic Powerkon IP65	Seetronic Powerkon IP65
Power Cable plug	Edison plug	Bare wire

Light Source

Type	Quantity	Power	Current	Lifespan
Quad-color RGBW	12	45 W	3 A	50,000 hours

Photometrics

Temperature	Beam Angle	Field Angle	Cutoff Angle	Zoom Range
2700 to 8000 K	3.7° to 33.6°	5.8° to 44.1°	6.5° to 48.6°	3.7° to 44.1°

Illuminance
41,355 lux @ 5 m (3.7° field)
1,267 lux @ 5 m (45.1° field)

Thermal

Maximum External Temperature	Cooling System
113 °F (45 °C)	Fan-assisted Convection

Control

DMX I/O Connector	Ethernet I/O Connector	Channel Range
3-pin/ 5-pin IP rated XLR	Neutrik IP rated RJ45	20Ch, 25Ch, 68Ch, 122Ch, 146Ch, 8Ch-36Ch, 20Ch-48Ch, or 26Ch-96Ch

Ordering

Product Name	Item Name	Item Code	UPC Number
Maverick Force 2 BeamWash	MAVERICKFORCE2BEAMWASH	08011942	781462223700

UL 1573
CSA C22.2 No. 166
E113093

Contact Us

General Information	Technical Support
Chauvet World Headquarters	
Address: 3360 Davie Rd. Davie, FL 33314 Voice: (954) 577-4455 Fax: (954) 929-5560 Toll Free: (800) 762-1084	Voice: (844) 393-7575 Fax: (954) 756-8015 Email: chauvetcs@chauvetlighting.com Website: www.chauvetprofessional.com
Chauvet U.K.	
Address: Pod 1 EVO Park Little Oak Drive, Sherwood Park Nottinghamshire, NG15 0EB UK Voice: +44 (0) 1773 511115 Fax: +44 (0) 1773 511110	Email: UKtech@chauvetlighting.eu Website: www.chauvetprofessional.eu
Chauvet Benelux	
Address: Stokstraat 18 9770 Kruishoutem Belgium Voice: +32 9 388 93 97	Email: BNLtech@chauvetlighting.eu Website: www.chauvetprofessional.eu
Chauvet France	
Address: 3, Rue Ampère 91380 Chilly-Mazarin France Voice: +33 1 78 85 33 59	Email: FRtech@chauvetlighting.fr Website: www.chauvetprofessional.eu
Chauvet Germany	
Address: Bruno-Bürgel-Str. 11 28759 Bremen Germany Voice: +49 421 62 60 20	Email: DEtech@chauvetlighting.de Website: www.chauvetprofessional.eu
Chauvet Mexico	
Address: Av. de las Partidas 34 - 3B (Entrance by Calle 2) Zona Industrial Lerma Lerma, Edo. de México, CP 52000 Voice: +52 (728) 690-2010	Email: servicio@chauvet.com.mx Website: www.chauvetprofessional.mx

Warranty & Returns

For warranty terms and conditions and return information, please visit our website.

For customers in the United States and Mexico: www.chauvetlighting.com/warranty-registration.

For customers in the United Kingdom, Republic of Ireland, Belgium, the Netherlands, Luxembourg, France, and Germany: www.chauvetlighting.eu/warranty-registration.